OriginGPS
mini+mighty

MULTI SISO HORNET (ORG4502)

GPS / GNSS MODULE WITH INTEGRATED ANTENNA

Datasheet

OriginGPS.com

INDEX

TABLE INDEX

FIGURE INDEX

1. SCOPE

This document describes the features and specifications of Multi SISO Hornet ORG4502 GPS antenna module.

2. DISCLAIMER

All trademarks are properties of their respective owners.
Performance characteristics listed in this document do not constitute a warranty or guarantee of product performance. OriginGPS assumes no liability or responsibility for any claims or damages arising out of the use of this document, or from the use of integrated circuits based on this document.
OriginGPS assumes no liability or responsibility for unintentional inaccuracies or omissions in this document.
OriginGPS reserves the right to make changes in its products, specifications and other information at any time without notice.
OriginGPS reserves the right to conduct, from time to time, and at its sole discretion, firmware upgrades. As long as those FW improvements have no material change on end customers, PCN may not be issued.
OriginGPS navigation products are not recommended to use in life saving or life sustaining applications.

3. SAFETY INFORMATION

Improper handling and use can cause permanent damage to the product.

4. ESD SENSITIVITY

This product is ESD sensitive device and must be handled with care.

5. CONTACT INFORMATION

Support - support@origingps.com or Online Form
Marketing and sales - marketing@origingps.com
Web – www.origingps.com

6. RELATED DOCUMENTATION

№	DOCUMENT NAME
1	Multi SISO Hornet – ORG4502 Evaluation Kit Datasheet
2	Spider and Hornet - Software User Manual
3	Spider and Hornet - NMEA Protocol Reference Manual
4	Spider and Hornet - One Socket Protocol Reference Manual
5	Spider and Hornet - OSP® GNSS Extensions Reference Manual
6	Spider and Hornet - Low Power Modes Application Note
7	SiRFLive FAQ

TABLE 1 – RELATED DOCUMENTATION

7. REVISION HISTORY

REVISION	DATE	CHANGE DESCRIPTION	Author
1.0	January 31, 2016	First release	Mark K.
1.1	May 9, 2016	MEMS update	Mark K.
1.2	July 4, 2016	Default Interface update – UART	Mark K.
1.3	October 11, 2017	Related documentation update Table 9 – footnotes update	Mark K.
1.4	October 22, 2017	Voltage ripple update	Mark K.

TABLE 2 – REVISION HISTORY

8. GLOSSARY

A-GPS **A**ssisted **GPS**
ABP™ **A**lmanac **B**ased **P**osition
AC **A**lternating **C**urrent
ADC **A**nalog to **D**igital **C**onverter
AGC **A**utomatic **G**ain **C**ontrol
ATP™ **A**daptive **T**rickle **P**ower
BBRAM **B**attery **B**acked-up **RAM**
BE **B**roadcast **E**phemeris
BPF **B**and **P**ass **F**ilter
C/N$_0$ **C**arrier to **N**oise density ratio [dB-Hz]
CDM **C**harged **D**evice **M**odel
CE European Community conformity mark
CEP **C**ircular **E**rror **P**robability
CGEE™ **C**lient **G**enerated **E**xtended **E**phemeris
CMOS **C**omplementary **M**etal-**O**xide **S**emiconductor
CPU **C**entral **P**rocessing **U**nit
CTS **C**lear-**T**o-**S**end
CW **C**ontinuous **W**ave
DC **D**irect **C**urrent
DOP **D**ilution **O**f **P**recision
DR **D**ead **R**eckoning
DSP **D**igital **S**ignal **P**rocessor
ECEF **E**arth **C**entred **E**arth **F**ixed
ECHA **E**uropean **Ch**emical **A**gency
EE **E**xtended **E**phemeris
EGNOS **E**uropean **G**eostationary **N**avigation **O**verlay **S**ervice
EIA **E**lectronic **I**ndustries **A**lliance
EMC **E**lectro-**M**agnetic **C**ompatibility
EMI **E**lectro-**M**agnetic **I**nterference
ENIG **E**lectroless **N**ickel **I**mmersion **G**old
ESD **E**lectro-**S**tatic **D**ischarge
ESR **E**quivalent **S**eries **R**esistance
EU **E**uropean **U**nion
EVB **E**valuation **B**oard
EVK **E**valuation **K**it
FCC **F**ederal **C**ommunications **C**ommission
FSM **F**inite **S**tate **M**achine
GAGAN **G**PS **A**ided **G**eo-**A**ugmented **N**avigation

GNSS **G**lobal **N**avigation **S**atellite **S**ystem
GPIO **G**eneral **P**urpose **I**nput or **O**utput
GPS **G**lobal **P**ositioning **S**ystem
HBM **H**uman **B**ody **M**odel
HDOP **H**orizontal **D**ilution **O**f **P**recision
I²C **I**nter-**I**ntegrated **C**ircuit
I/O **I**nput or **O**utput
IC **I**ntegrated **C**ircuit
ICD **I**nterface **C**ontrol **D**ocument
IF **I**ntermediate **F**requency
ISO **I**nternational **O**rganization for **S**tandardization
JEDEC **J**oint **E**lectron **D**evice **E**ngineering **C**ouncil
KA **K**eep **A**live
KF **K**alman **F**ilter
LDO **L**ow **D**ropout regulator
LGA **L**and **G**rid **A**rray
LNA **L**ow **N**oise **A**mplifier
LP **L**ow **P**ower
LS **L**east **S**quares
LSB **L**east **S**ignificant **B**it
MID **M**essage **Id**entifier
MM **M**achine **M**odel
MPM™ **M**icro **P**ower **M**ode
MSAS **M**ulti-functional **S**atellite **A**ugmentation **S**ystem
MSB **M**ost **S**ignificant **B**it
MSL **M**oisture **S**ensitivity **L**evel
NFZ™ **N**oise-**F**ree **Z**ones **S**ystem
NMEA **N**ational **M**arine **E**lectronics **A**ssociation
NVM **N**on-**V**olatile **M**emory
OSP® **O**ne **S**ocket **P**rotocol
PCB **P**rinted **C**ircuit **B**oard
PLL **P**hase **L**ock **L**oop
PMU **P**ower **M**anagement **U**nit
POR **P**ower-**O**n **R**eset
PPS **P**ulse **P**er **S**econd
PRN **P**seudo-**R**andom **N**oise
PSRR **P**ower **S**upply **R**ejection **R**atio
PTF™ **P**ush-**T**o-**F**ix
QZSS **Q**uasi-**Z**enith **S**atellite **S**ystem
RAM **R**andom **A**ccess **M**emory
REACH **R**egistration, **E**valuation, **A**uthorisation and Restriction of **Ch**emical substances
RF **R**adio **F**requency
RHCP **R**ight-**H**and **C**ircular **P**olarized
RMS **R**oot **M**ean **S**quare
RoHS **R**estriction of **H**azardous **S**ubstances directive
ROM **R**ead-**O**nly **M**emory
RTC **R**eal-**T**ime **C**lock
RTS **R**eady-**T**o-**S**end
SAW **S**urface **A**coustic **W**ave
SBAS **S**atellite-**B**ased **A**ugmentation **S**ystems
SGEE™ **S**erver **G**enerated **E**xtended **E**phemeris

SID **S**ub-**Id**entifier
SIP **S**ystem **I**n **P**ackage
SMD **S**urface **M**ounted **D**evice
SMPS **S**witched **M**ode **P**ower **S**upply
SMT **S**urface-**M**ount **T**echnology
SOC **S**ystem **O**n **C**hip
SPI **S**erial **P**eripheral **I**nterface
SSB® **S**iRF **S**tandard **B**inary
SV **S**atellite **V**ehicle
TCXO **T**emperature-**C**ompensated Crystal **O**scillator
TTFF **T**ime **T**o **F**irst **F**ix
TTL **T**ransistor-**T**ransistor **L**ogic
UART **U**niversal **A**synchronous **R**eceiver/**T**ransmitter
VCCI **V**oluntary **C**ontrol **C**ouncil for **I**nterference by information technology equipment
VEP **V**ertical **E**rror **P**robability
VGA **V**ariable-**G**ain **A**mplifier
WAAS **W**ide **A**rea **A**ugmentation **S**ystem

9. ABOUT HORNET FAMILY

OriginGPS GNSS receiver modules have been designed to address markets where size, weight, stand-alone operation, highest level of integration, power consumption and design flexibility - all are very important.

OriginGPS' Hornet family breaks size barrier, offering the industry's smallest fully-integrated, highly-sensitive GPS and GNSS modules with integrated antennas or on-board RF connectors.

Hornet family features OriginGPS' proprietary NFZ™ technology for high sensitivity and noise immunity even under marginal signal condition, commonly found in urban canyons, under dense foliage or when the receiver's position in space rapidly changes.

Hornet family enables the shortest TTM (Time-To-Market) with minimal design risks.

Just connect power supply on a single layer PCB.

10. ABOUT MULTI SISO HORNET MODULE

Multi SISO Hornet is a complete SiP featuring miniature LGA SMT footprint designed to commit unique integration features for high volume cost sensitive applications.

Designed to support compact and traditional applications, Multi Micro Hornet ORG4502 module is a miniature multi-channel GPS/ GLONASS with SBAS, QZSS and other regional overlay systems receiver that continuously tracks all satellites in view, providing real-time positioning data in industry's standard NMEA format.

Multi Micro Hornet ORG4502 module offers superior sensitivity and outstanding performance, achieving rapid TTFF in less than one second, accuracy of approximately two meters, and tracking sensitivity of -165dBm.

Sized only 28mm x 18.5mm Multi SISO Hornet ORG4502 module is industry's small sized, record breaking solution.

Multi Micro Hornet module integrates OriginGPS proprietary on-board GNSS antenna, dual-stage LNA, RF LDO, SAW filter, TCXO, RTC crystal and RF shield with market-leading SiRFstarV™ GNSS SoC.

Multi Micro Hornet ORG4502 module is introducing industry's lowest energy per fix ratio, unparalleled accuracy and extremely fast fixes even under challenging signal conditions, such as in built-up urban areas, dense foliage or even indoor.

Integrated GPS SoC incorporating high-performance microprocessor and sophisticated firmware keeps positioning payload off the host, allowing integration in embedded solutions with low computing resources.

Innovative architecture can detect changes in context, temperature, and satellite signals to achieve a state of near continuous availability by maintaining and opportunistically updating its internal fine time, frequency, and satellite ephemeris data while consuming mere microwatts of battery power.

11. ABOUT ORIGINGPS

OriginGPS is a world leading designer, manufacturer and supplier of miniature positioning modules, antenna modules and antenna solutions.

OriginGPS modules introduce unparalleled sensitivity and noise immunity by incorporating Noise Free Zone system (NFZ™) proprietary technology for faster position fix and navigation stability even under challenging satellite signal conditions.

Founded in 2006, OriginGPS is specializing in development of unique technologies that miniaturize RF modules, thereby addressing the market need for smaller wireless solutions.

12. DESCRIPTION

12.1. FEATURES

- Autonomous operation
- Active antenna on-board
- Easy for integration using ZIF
- Pin to pin compatible with ORG4402 GPS module
- OriginGPS Noise Free Zone System (NFZ™) technology
- Fully integrating:
  Antenna element, LNA, SAW filter, TCXO, RTC crystal, GNSS SoC, LDO regulator, RF shield
- GPS L1 1575.42 frequency, C/A code
- GLONASS L1 FDMA 1598-1606MHz frequency band, SP signal
- SBAS (WAAS, EGNOS, MSAS) and QZSS support
- Concurrent tracking of multiple constellations
- 52 channels
- Ultra-high Sensitivity down to -165dBm enabling Indoor Tracking
- TTFF of < 1s in 50% of trials under Hot Start conditions
- Low Power Consumption of ≤ 15mW in ATP™ mode
- High Accuracy of < 1.5m in 50% of trials
- High update rate of 5Hz, 1Hz by default
- Autonomous A-GNSS by Client Generated Extended Ephemeris (CGEE™) for non-networked devices
- Predictive A-GNSS by Server Generated Extended Ephemeris (SGEE™) for connected devices
- Ephemeris Push™ for storing and loading broadcast ephemeris
- Host controlled power saving mode
- Self-managed low power modes - ATP™ and PTF™.
- Almanac Based Positioning (ABP™)
- Multipath and cross-correlation mitigation
- Active Jammer Detector and Remover

- Smart Data Logging to external memory
- Fast Time Synchronization for rapid single satellite time solution
- ARM7® microprocessor system
- UART interface
- NMEA protocol by default, switchable into One Socket Protocol (OSP®)
- Programmable baud rate and messages rate
- 1PPS Output
- Single voltage supply 2.1V to 5.5V
- Ultra-low weight of 7.9g
- Operating from -40°C to +85°C
- FCC, CE, VCCI compliant
- RoHS II/REACH compliant

12.2. ARCHITECTURE

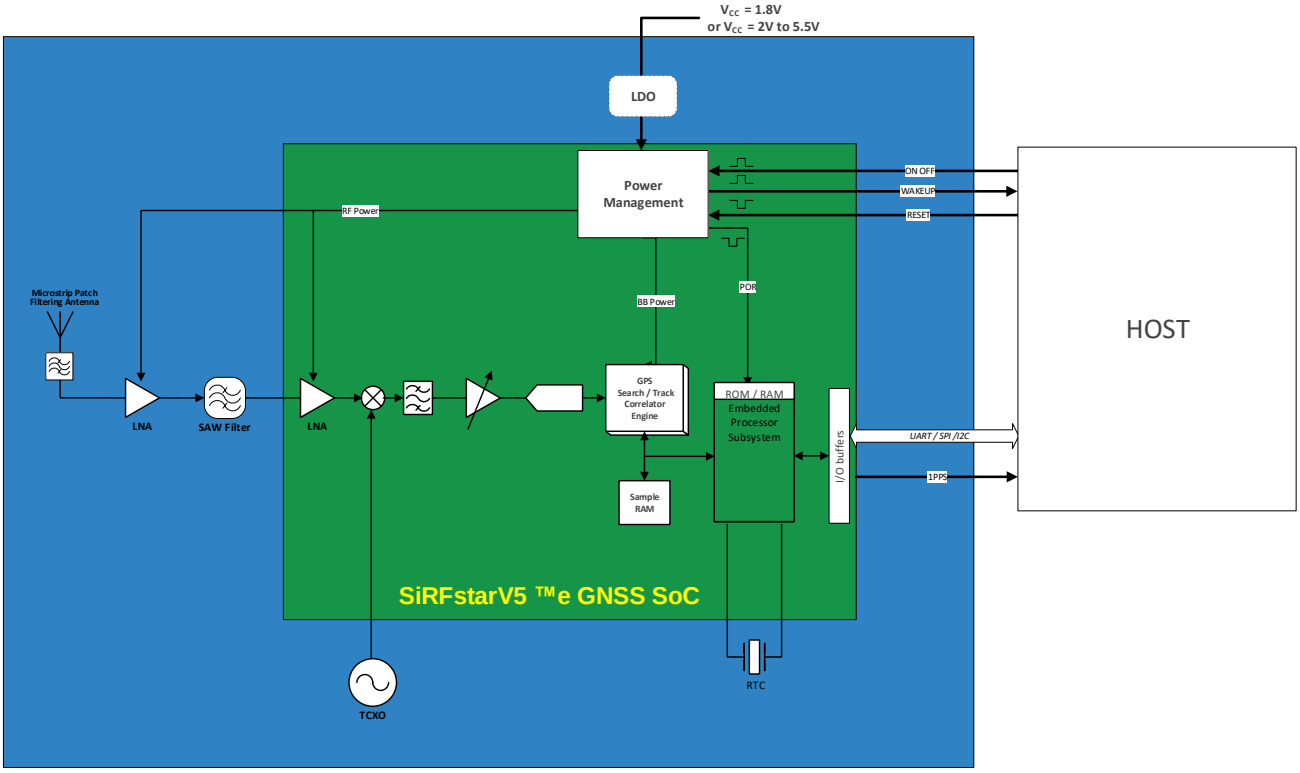

FIGURE 1 – ORG ARCHITECTURE

- **Antenna**

  OriginGPS proprietary Microstrip Patch Antenna collects GNSS signals from the medium.
  Antenna is built from hi-K ceramic element mounted on top of RF shield, providing stable resonance.

- **GNSS SAW Filter**

  Band-Pass SAW filter eliminates out-of-band signals that may interfere to GNSS reception.

  GNSS SAW filter is optimized for low Insertion Loss in GNSS band and low Return Loss outside it.

GNSS LNA

Dual-stage cascaded LNAs amplify GNSS signals to meet RF down converter input threshold. Noise Figure optimized design was implemented to provide maximum sensitivity.

TCXO

Highly stable 26MHz oscillator controls down conversion process in RF block of the GNSS SoC. Characteristics of this component are important factors for higher sensitivity, shorter TTFF and better navigation stability.

RTC crystal

Tuning fork 32.68KHz quartz crystal with very tight specifications is necessary for maintaining Hot Start and Warm Start capabilities of the module.

LDO regulator

RF LDO provides regulated voltage supply over wide input voltage range, with low quiescent current and high PSRR.

RF Shield

RF enclosure avoids external interference from compromising sensitive circuitry inside the module.

RF shield also blocks module's internal high frequency emissions from being radiated.

SiRFstarV™ 5e GNSS SoC

CSR 5e is a 5-th generation SiRFstar™ product.
It is a hybrid positioning processor that combines GPS, GLONASS and SBAS data to provide a high performance navigation solution.
SiRFstarV™ 5e is a full SoC built on a low-power RF CMOS single-die, incorporating GNSS RF, GNSS baseband, integrated navigation solution software and ARM® processor.

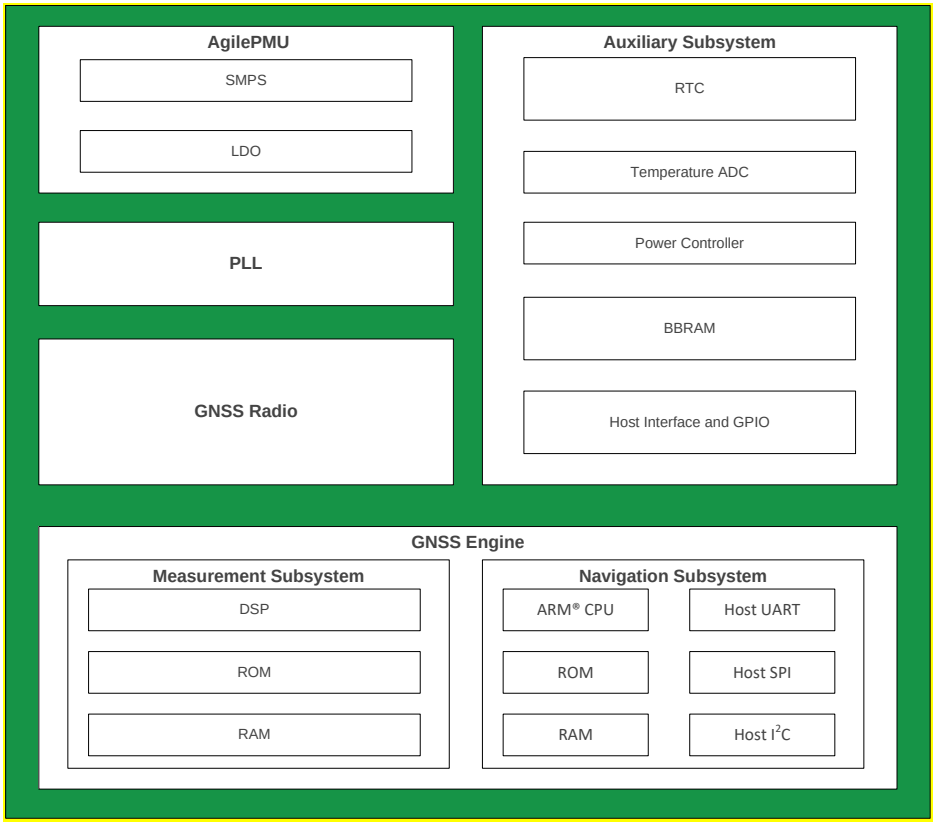

FIGURE 2 – SiRFstarV™ 5e GNSS SoC BLOCK DIAGRAM

SiRFstarV™ 5e SoC includes the following units:

- GNSS radio subsystem containing single input dual receive paths for concurrent GPS and GLONASS, harmonic-reject double balanced mixer, fractional-N synthesizer, integrated self-calibrating filters, IF VGA with AGC, high-sample rate ADCs with adaptive dynamic range.
- Measurement subsystem including DSP core for GNSS signals acquisition and tracking, interference scanner and detector, wideband and narrowband interference removers, multipath and cross-correlation detectors, dedicated DSP code ROM and DSP cache RAM.
- Measurement subsystem interfaces GNSS radio subsystem.

- Navigation subsystem comprising ARM7® microprocessor system for position, velocity and time solution, program ROM, data RAM, cache and patch RAM, SPI flash driver, host interface UART, SPI and I^2C drivers.
- Navigation subsystem interfaces measurement subsystem.
- Auxiliary subsystem containing RTC block and health monitor, temperature sensor for reference clock compensation, battery-backed SRAM for satellite data storage, voltage supervisor with POR, PLL controller, GPIO controller, 48-bit RTC timer and alarms, CPU watchdog monitor.
- Auxiliary subsystem interfaces navigation subsystem, PLL and PMU subsystems.
- PMU subsystem containing voltage regulators for RF and baseband domains.

13. ELECTRICAL SPECIFICATIONS

13.1. ABSOLUTE MAXIMUM RATINGS

Stresses exceeding Absolute Maximum Ratings may damage the device.

PARAMETER			SYMBOL	MIN	MAX	UNIT
Power Supply Voltage			V_{CC}	2.05	6	V
Power Supply Current[1]			I_{CC}		150	mA
RF Input Voltage			V_{RF}	-25	+25	V
I/O Voltage			V_{IO}	-0.3	+3.65	V
I/O Source/Sink Current			I_{IO}	-4	+4	mA
ESD Rating	I/O pads	HBM[4] method	$V_{IO(ESD)}$	-2000	+2000	V
		CDM[5] method		-400	+400	V
	Power pads	HBM[4] method	$V_{CC(ESD)}$	-2000	+2000	V
		CDM[5] method		-500	+500	V
	RF[2]	HBM[4] method	$V_{RF(ESD)}$	-2000	+2000	V
		MM[6] method		-100	+100	V
RF Power[3]	f_{IN} = 1560MHz÷1630MHz		P_{RF}		0	dBm
	f_{IN} <1560MHz, >1630MHz				0	dBm
Operating Temperature			T_{AMB}	-40	+85	°C
Storage Temperature			T_{ST}	-55	+125	°C

TABLE 3 – ABSOLUTE MAXIMUM RATINGS

Notes:

1. Inrush current of up to 100mA for about 20µs duration.
2. Voltage applied on antenna element.
3. Power delivered to antenna element.
4. Human Body Model (HBM) contact discharge per EIA/JEDEC JESD22-A114D.
5. Charged Device Model (CDM) contact discharge per EIA/JEDEC JESD22-C101.
6. Machine Model (MM) contact discharge per EIA/JEDEC JESD22-A115C.

13.2. RECOMMENDED OPERATING CONDITIONS

Exposure to stresses above Recommended Operating Conditions may affect device reliability.

PARAMETER	SYMBOL	MODE / PAD	TEST CONDITIONS	MIN	TYP	MAX	UNIT
Power supply voltage	V_{CC}	V_{CC}		+2.1		+5.5	V
Power Supply Current[1]	I_{CC}	Acquisition	GPS		56		mA
			GPS+GLONASS		63		mA
		Tracking	GPS		48		mA
			GPS+GLONASS		51		mA
		ATP™ Tracking[2]			17.3		mA
		CPU only[3]			15		mA
		Standby[3]				0.1	mA
		PTF™[4]			3.5		mA
		Hibernate			0.42	54	mA
Input Impedance	Z_{IN}	RF Input	f_{IN} = 1575.5MHz		50		Ω
Input Return Loss	R_{LIN}			-7			dB
Input Power Range	P_{IN}		GPS or GLONASS	-165		-110	dBm
Input Frequency Range	f_{IN}			1560		1620	MHz
Operating Temperature[5]	T_{AMB}			-40	+25	+85	°C
Storage Temperature	T_{ST}			-55	+25	+125	°C
Relative Humidity[6]	R_H		T_{AMB}	5		95	%

TABLE 4 – RECOMMENDED OPERATING CONDITIONS

Notes:
1. Typical values under conducted signal conditions of -130dBm and ambient temperature of +25°C.
2. ATP™ mode 200:1 (200ms on-time, 1s period), R01 standard ordering option, GPS-only tracking.
3. Transitional states of ATP™ power saving mode.
4. PTF™ mode 30:30 (30s max. on-time – 18s typical, 30m period), R01 standard ordering option, GPS-only tracking.
5. Longer TTFF is expected while operating below -30°C to -40°C.
6. Relative Humidity is within Operating Temperature range.

14. PERFORMANCE

14.1. ACQUISITION TIME

TTFF (Time To First Fix) – is the period of time from module's power-up till valid position estimation.

14.1.1. HOT START

Hot Start results either from a software reset after a period of continuous navigation or a return from a short idle period that was preceded by a period of continuous navigation.
During Hot Start all critical data (position, velocity, time, and satellite ephemeris) is valid to the specified accuracy and available in RAM.

14.1.2. SIGNAL REACQUISITION

Reacquisition follows temporary blocking of GNSS signals.
Typical reacquisition scenario includes driving through tunnel.

14.1.3. AIDED START

Aided Start is a method of effectively reducing TTFF by providing valid satellite ephemeris data.
Aiding can be implemented using Ephemeris Push™, CGEE™ or SGEE™.

14.1.4. WARM START

Warm Start typically results from user-supplied position and time initialization data or continuous RTC operation with an accurate last known position available in RAM.
In this state position and time data are present and valid, but satellite ephemeris data validity has expired.

14.1.5. COLD START

Cold Start occurs when satellite ephemeris data, position and time data are unknown.
Typical Cold Start scenario includes first power application.

OPERATION[1]	MODE	VALUE	UNIT
Hot Start		< 1	s
Aided Start		< 10	s
Warm Start	GPS + GLONASS	< 26	s
	GPS	< 32	s
Cold Start	GPS + GLONASS	< 27	s
	GPS	< 35	s
Signal Reacquisition[2]		< 1	s

TABLE 5 – ACQUISITION TIME

Notes:

1. EVK is 24-hrs. static under signal conditions of -130dBm and ambient temperature of +25°C.
2. Outage duration ≤ 30s.

14.2. SENSITIVITY

14.2.1. TRACKING

Tracking is an ability of receiver to maintain valid satellite ephemeris data.
During tracking receiver may stop output valid position solutions.
Tracking sensitivity defined as minimum GNSS signal power required for tracking.

14.2.2. REACQUISITION

Reacquisition follows temporary blocking of GNSS signals.
Reacquisition sensitivity defined as minimum GNSS signal power required for reacquisition.

14.2.3. NAVIGATION

During navigation receiver consequently outputs valid position solutions.
Navigation sensitivity defined as minimum GNSS signal power required for reliable navigation.

14.2.4. HOT START

Hot Start sensitivity defined as minimum GNSS signal power required for valid position solution under Hot Start conditions.

14.2.5. AIDED START

Aided Start sensitivity defined as minimum GNSS signal power required for valid position solution following aiding process.

14.2.6. COLD START

Cold Start sensitivity defined as minimum GNSS signal power required for valid position solution under Cold Start conditions, sometimes referred as ephemeris decode threshold.

OPERATION[1]	MODE	VALUE	UNIT
Tracking	GPS	-167	dBm
	GLONASS	-165	dBm
Navigation	GPS	-164	dBm
	GLONASS	-164	dBm
Reacquisition[2]		-162	dBm
Hot Start[3]		-160	dBm
Aided Start[4]		-156	dBm
Cold Start	GPS	-148	dBm

TABLE 6 – SENSITIVITY

14.3. RECEIVED SIGNAL STRENGTH

PARAMETER[5]	VALUE	UNIT
C/N_0	45	dB-Hz

TABLE 7 – RECEIVED SIGNAL STRENGTH

Notes:

1. EVK is static, ambient temperature is +25°C, RF signals are conducted
2. Outage duration ≤ 30s.
3. Hibernate state duration ≤ 5m.
4. Aiding using Broadcast Ephemeris (Ephemeris Push™) or Extended Ephemeris (CGEE™ or SGEE™).
5. Average C/N_0 reported for 4 SVs, EVK is 24-hrs. static, outdoor, ambient temperature is +25°C.

14.4. POWER CONSUMPTION

OPERATION[1]	MODE	VALUE	UNIT
Acquisition	GPS	91	mW
	GPS + GLONASS	113	mW
Tracking	GPS	86	mW
	GPS + GLONASS	92	mW
Low Power Tracking	ATP™ Tracking[2]	31	mW
	PTF™[3]	0.9	
	5m Hibernate: 10s tracking	3.5	mW
Hibernate		0.75	mW

TABLE 8 – POWER CONSUMPTION

Notes:

1. Typical values under conducted signal conditions of -130dBm and ambient temperature of +25°C.
2. ATP™ mode 100:1 (100ms on-time, 1s period), GPS-only tracking.
3. PTF™ mode 30:30 (30s max. on-time – 18s typical, 30m period), GPS-only tracking.

14.5. ACCURACY

PARAMETER		FORMAT	MODE	VALUE	UNIT
Position[1]	Horizontal	CEP (50%)	GPS + GLONASS	< 1.5	m
			GPS + SBAS	< 2.0	m
			GPS	< 2.5	m
		2dRMS (95%)	GPS + GLONASS	< 3.0	m
			GPS + SBAS	< 4.0	m
			GPS	< 5.0	m
	Vertical	VEP (50%)	GPS + GLONASS	< 2.5	m
			GPS + SBAS	< 3.5	m
			GPS	< 4.0	m
		2dRMS (95%)	GPS + GLONASS	< 5.0	m
			GPS + SBAS	< 6.5	m
			GPS	< 7.5	m
Velocity[2]	over ground	50% of samples		< 0.01	m/s
Heading	to north	50% of samples		< 0.01	°
Time[1]		RMS jitter	1 PPS	≤ 30	ns

TABLE 9 – ACCURACY

Notes:

1. Module is static under signal conditions of -130dBm, ambient temperature is +25°C.
2. Speed over ground ≤ 30m/s.

14.6. DYNAMIC CONSTRAINS

PARAMETER	Metric	Imperial
Velocity and Altitude[1]	515m/s and 18,288m	1,000knots and 60,000ft
Velocity	600m/s	1,166knots
Altitude	-500m to 24,000m	-1,640ft to 78,734ft
Acceleration	4g	
Jerk	$5m/s^3$	

TABLE 10 – DYNAMIC CONSTRAINS

Note:

1. Standard dynamic constrains according to regulatory limitations.

15. POWER MANAGEMENT

15.1. POWER STATES

15.1.1. FULL POWER ACQUISITION

ORG4502 module stays in Full Power Acquisition state until a reliable position solution is made. Switching to GPS-only mode turns off GLONASS RF block lowering power consumption.

15.1.2. FULL POWER TRACKING

Full Power Tracking state is entered after a reliable position solution is achieved.
During this state the processing is less intense compared to Full Power Acquisition, therefore power consumption is lower. Full Power Tracking state with navigation update rate at 5Hz consumes more power compared to default 1Hz navigation.

15.1.3. CPU ONLY

CPU Only is the transitional state of Trickle Power saving mode when the RF and DSP sections are partially powered off. This state is entered when the satellites measurements have been acquired, but navigation solution still needs to be computed.

15.1.4. STANDBY

Standby is the transitional state of Trickle Power saving mode when RF and DSP sections are completely powered off and baseband clock is stopped.

15.1.5. HIBERNATE

ORG4502 module boots into Hibernate state after power supply applied.
During this state RF, DSP and baseband sections are completely powered off leaving only RTC and Battery-Backed RAM running.
ORG4502 will perform Hot Start if stayed in Hibernate state less than 4 hours from last valid position solution.

15.2. BASIC POWER SAVING MODE

Basic power saving mode is elaborating host in straightforward way for controlling transfers between Full Power and Hibernate states.

Current profile of this mode has no hidden cycles of satellite data refresh.

Host may condition transfers by tracking duration, accuracy, satellites in-view or other parameters.

15.3. SELF MANAGED POWER SAVING MODES

Multi SISO Hornet module has several self-managed power saving modes tailored for different use cases.
These modes provide several levels of power saving with degradation level of position accuracy.
Initial operation in Full Power state is a prerequisite for accumulation of satellite data determining location, fine time and calibration of reference clocks.

15.3.1. ADAPTIVE TRICKLE POWER (ATP™)

Trickle Power (ATP™) mode is best suited for applications that require navigation solutions at a fixed rate as well as low power consumption and an ability to track weak signals.
This power saving mode provides the most accurate position among self-managed modes.
In this mode the module is intelligently cycled between Full Power state, CPU Only state consuming 14mA and Standby state consuming ≤ 100µA, therefore optimizing current profile for low power operation.
Trickle Power update rate can be 1 second to 10 seconds.
On-time including Full Power Tracking and CPU Only states can be 200ms to 900ms.

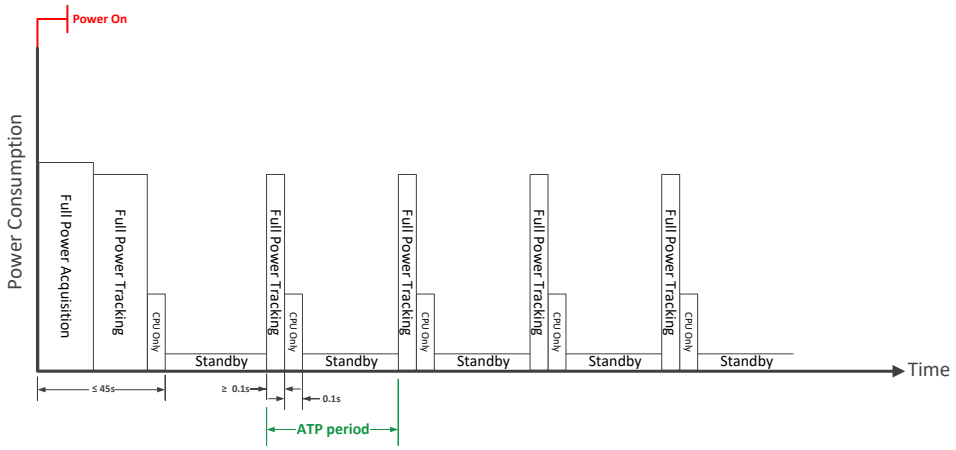

FIGURE 3 – ATP™ TIMING

15.3.2. PUSH TO FIX II (PTF™)

Push To Fix II has been improved over previous versions in SiRFStarIV and earlier.
PTF™ is best suited for applications that require infrequent navigation solutions.
In this mode ORG4502 module is mostly in Hibernate state, drawing ≤ 54µA of current, waking up for satellite data refresh in fixed periods of time.
PTF™ period can be anywhere between 10 seconds and 2 hours.
Host can initiate an instant position report by toggle the ON_OFF pad to wake up the module.
During fix trial module will stay in Full Power state until good position solution is estimated or pre-configured timeout for it has expired.
Push-To-Fix II operates in the same manner as the original Push-To-Fix in earlier versions but with an easier entry to start up and an improvement in both power consumption and data collection.

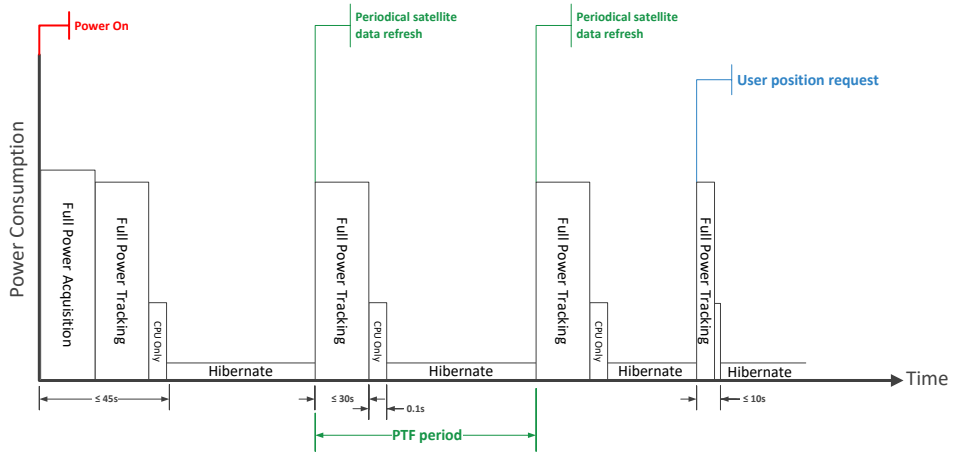

FIGURE 4 – PTF™ TIMING

15.3.3. ADVANCED POWER MANAGEMENT (APM™)

APM™ mode is designed for Aided-GPS wireless applications.
APM™ allows power savings while ensuring that the **Q**uality **o**f the **S**olution (QoS) in maintained when signals level drop.
In APM™ mode the module is intelligently cycled between Full Power and Hibernate states.
In addition to setting the position report interval, a QoS specification is available that sets allowable error estimates and selects priorities between position report interval and more power saving.
User may select between Duty Cycle Priority for more power saving and Time Between Fixes (TBF) priority with defined or undefined maximum horizontal error.
TBF range is from 10s to 180s between fixes, Power Duty Cycle range is between 5% to 100%.
Maximum position error is configurable between 1 to 160m.
The number of APM™ fixes is configurable up to 255 or set to continuous.

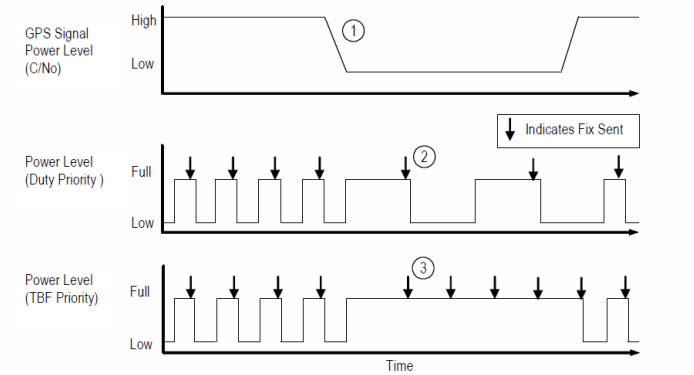

FIGURE 5 – APM™ TIMING

Notes:

1. GPS signal level drops (e.g. user walks indoor).
2. Lower signal results in longer ON time. To maintain Duty Cycle Priority, OFF time is increased.
3. Lower signal means missed fix. To maintain future TBFs module goes Full Power state until signal levels improve.

16. EXTENDED FEATURES

16.1. ALMANAC BASED POSITIONING (ABP™)

With ABP™ mode enabled, the user can get shorter Cold Start TTFF as tradeoff with position accuracy.

When no sufficient ephemeris data is available to calculate an accurate solution, a coarse solution will be provided where the position is calculated based on one or more of the GPS satellites, having their states derived from the almanac data.

Data source for ABP™ may be either stored factory almanac, broadcasted or pushed almanac.

16.2. ACTIVE JAMMER DETECTOR AND REMOVER

Jamming Detector is embedded DSP software block that detects interference signals in GPS L1 and GLONASS L1 band.

Jamming Remover is additional DPS software block that sort-out Jamming Detector output mitigating up to 8 interference signals of Continuous Wave (CW) type up to 80dB-Hz each.

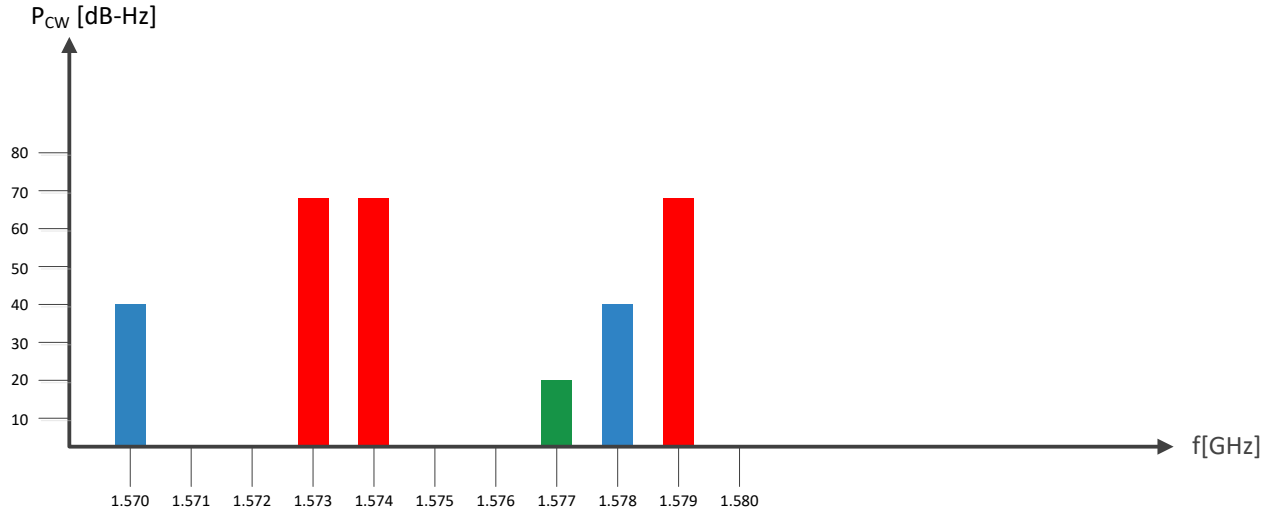

FIGURE 6 – ACTIVE JAMMER DETECTOR FREQUENCY PLOT

16.3. CLIENT GENERATED EXTENDED EPHEMERIS (CGEE™)

CGEE™ feature allows shorter TTFFs by providing predicted (synthetic) ephemeris files created within a non-networked host system from previously received satellite ephemeris data.

The prediction process requires good receipt of broadcast ephemeris data for all satellites.

EE files created this way are good for up to 3 days and then expire.

CGEE™ feature requires avoidance of power supply removal.

CGEE™ data files are stored and managed by host.

16.4. SERVER GENERATED EXTENDED EPHEMERIS (SGEE™)

SGEE™ enables shorter TTFFs by fetching **E**xtended **E**phemeris (EE) file downloaded from web server.

Host is initiating periodic network sessions of EE file downloads, storage and provision to module.

There is one-time charge for set-up, access to OriginGPS EE distribution server and end-end testing for re-distribution purposes, or there is a per-unit charge for each module within direct SGEE™ deployment.

GPS EE files are provided with look-ahead of 3 days.

17. INTERFACE

17.1. PIN ASSIGNMENT

Pad Number	Pad Name	Pad Description	Direction	Default	Notes
1	GND	System Ground	Power		
2	1PPS	UTC Time Mark	Output	Low	1.8V compatible
3	GPS_nRESET	Asynchronous Reset	Input	High	
4	GPS_RX	UART Receive	Input	High	
5	WAKEUP	Power State Indicator	Output		High for Full Power, Low for Hibernate
6	GPS_ON	Power State Control	Input	Low	Toggle Low-High-Low for power up
7	GPS_EN	Module Enable	Input	High	Drive low to inhibit the module
8	GPS_TX	UART Transmit	Output	Low	$V_{OH} = V_{CC} – 0.1V$
9	V_{CC}	System Power	Power		2.1- 5.5V
10	NC	Not Connected			

TABLE 11 – ORG4502 PIN-OUT

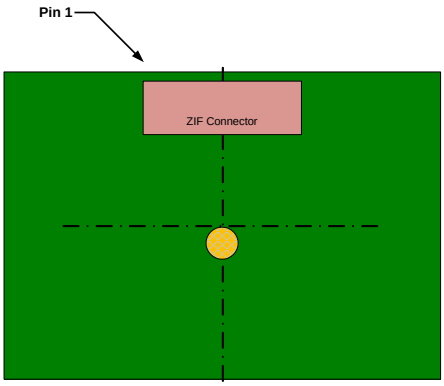

Bottom View

17.2. POWER SUPPLY

The ORG4502 module requires only one power supply VCC, which can be supplied directly from a battery since the module has internal regulators. It is recommended to keep the power supply on all the time in order to maintain the non-volatile RTC and RAM active for fastest possible TTFF. When the VCC is powered off settings are reset to factory default and the receiver performs Cold Start on next power up.

VCC range is 2.1 to 5.5V DC. Typical ICC current is 23mA@3.3V during acquisition. Peak ICC current is 50 mA. Power supply current consumption varies according to the processor load and satellite acquisition. Typical ICC current in Hibernate state is 50µA. Voltage ripple below 20mVPP allowed for frequency between 100KHz and 3MHz. Voltage ripple below 15mVPP allowed for frequency above 3MHz. Higher voltage ripple may compromise the ORG4502 module performance. The under voltage lockout (UVLO) circuit prevents the device from misoperation at low input voltages. The UVLO circuit prevents the integrated DC-DC switch-mode regulator from turning on the switch or

rectifier MOSFET under undefined conditions. It has a UVLO threshold set to 1.8V. Fully functional operation is permitted for input voltage down to the falling UVLO threshold level. The converter starts operation again once the input voltage trips the rising UVLO threshold level.

17.2.1. GROUND

Single Ground pad should be connected to the main Ground with shortest possible trace or via.

17.3. CONTROL INTERFACE

17.3.1. ON_OFF

ON_OFF input is used to switch module between different power states:

- While in Hibernate state, ON_OFF pulse will initiate transfer into Full Power state.
- While in PTF™ mode, ON_OFF pulse will initiate one PTF™ request.
- While in Full Power state, ON_OFF pulse will initiate orderly shutdown into Hibernate state.

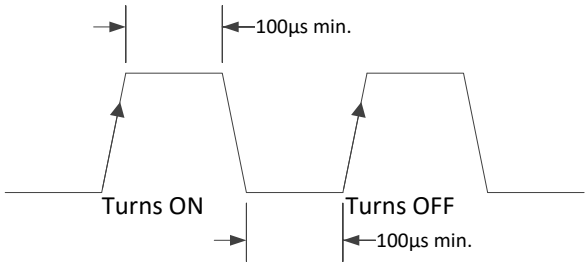

FIGURE 7 – ON_OFF TIMING

ON_OFF detector set requires a rising edge and high logic level that persists for at least 100µs.
ON_OFF detector reset requires ON_OFF asserted to low logic level for at least 100µs.

Recommended ON_OFF Low-High-Low pulse length is 100ms.

ON_OFF pulses with less than 1s intervals are not recommended.

Multiple switch bounce pulses are recommended to be filtered out.

Pull-down resistor of 10kΩ-33kΩ is recommended to avoid accidental power mode change.

ON_OFF input is tolerable up to 3.6V.

Do not drive high permanently or pull-up this input.

This line must be connected to host.

17.3.2. WAKEUP

WAKEUP output from module is used to indicate power state.

A low logic level indicates that the module is in one of its low-power states - Hibernate or Standby. A high logic level indicates that the module is in Full Power state.

Connecting WAKEUP to ON_OFF enables autonomous start to Full Power state.

In addition WAKEUP output can be used to control auxiliary devices.

Wakeup output is LVCMOS 1.8V compatible.

Do not connect if not in use.

17.3.3. $\overline{\text{RESET}}$

Power-on-Reset (POR) sequence is generated internally.

In addition, external reset is available through $\overline{\text{RESET}}$ pin.

Resetting module clears the state machine of self-managed power saving modes to default.

$\overline{\text{RESET}}$ signal should be applied for at least 1µs.
$\overline{\text{RESET}}$ input is active low and has internal pull-up resistor of 1MΩ.

Do not drive this input high.

Do not connect if not in use.

17.3.4. 1PPS

Pulse-Per-Second (PPS) output provides a pulse signal for timing purposes.

PPS output starts when 3D position solution has been obtained using 5 or more GNSS satellites.

PPS output stops when 3D position solution is lost.

Pulse length (high state) is 200ms with rising edge is less than 30ns synchronized to UTC epoch.

The correspondent UTC time message is generated and put into output FIFO 300ms after the PPS signal. The exact time between PPS and UTC time message delivery depends on message rate, message queue and communication baud rate.

1PPS output is LVCMOS 1.8V compatible.

Do not connect if not in use.

17.4. DATA INTERFACE

17.4.1. UART

Multi SISO Hornet ORG4502 has a standard UART port:

- TX used for GPS data reports. Output logic high voltage level is VCC – 0.1V.
- RX used for receiver control. Input logic high voltage level is 1.8V to 3.6V.
- The configuration for baud rates and respective protocols can be changed by commands via NMEA or OSP (SiRF Binary) protocols.

18. DESIGN RESTRICTIONS

In case of adjacent high speed components, like CPU or memory, high frequency components, like transmitters, clock resonators or oscillators, metal planes, like LCD or battery enclosures, please contact OriginGPS for more precise, application specific recommendations.

19. OPERATION

When power is first applied, module goes into a Hibernate state while integrated RTC starts and internal Finite State Machine (FSM) sequences though to “Ready-to-Start” state.

Host is not required to control external master $\overline{\text{RESET}}$ since module’s internal reset circuitry handles detection of power application.

While in “Ready-to-Start” state, module awaits a pulse to the ON_OFF input.

Since integrated RTC startup times are variable, host is required either to wait for a fixed interval or to monitor a short Low-High-Low pulse on WAKEUP output that indicates FSM “Ready-to-Start” state.

Another option is to repeat a pulse on the ON_OFF input every second until the module starts by either detecting a stable logic high level on WAKEUP output or neither generation of UART messages.

19.1. STARTING THE MODULE

A pulse on the ON_OFF input line when FSM is ready and in startup-ready state, Hibernate state, standby state, will command the module to start.

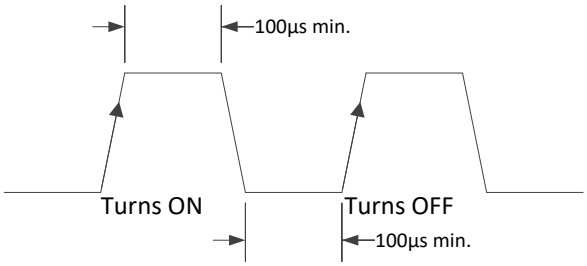

FIGURE 7 – ON_OFF TIMING

ON_OFF detector set requires a rising edge and high logic level that persists for at least 100µs.

ON_OFF detector reset requires ON_OFF asserted to low logic level for at least 100µs.

Recommended ON_OFF Low-High-Low pulse length is 100ms.

ON_OFF pulses with less than 1s intervals are not recommended.

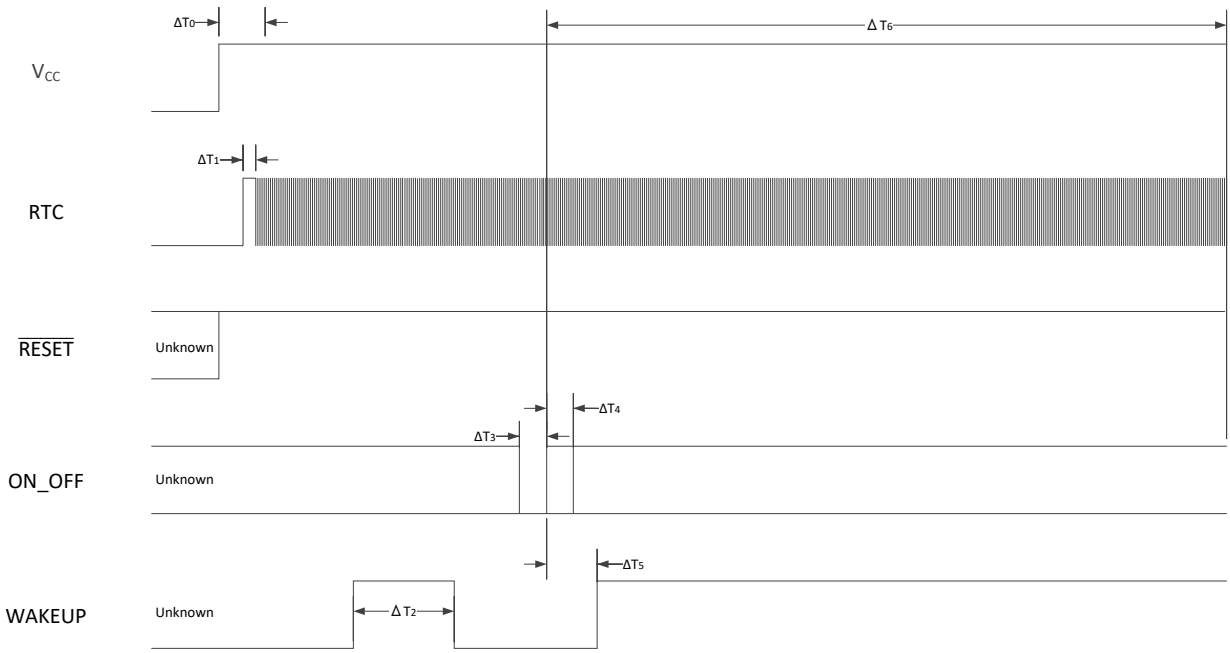

FIGURE 9 – START-UP TIMING

SYMBOL	PARAMETER	CONDITION	MIN	TYP	MAX	UNIT
f_{RTC}	RTC Frequency	+25°C	-20 ppm	32768	+20 ppm	Hz
t_{RTC}	RTC Tick	+25°C		30.5176		µs
ΔT_1	RTC Startup Time			300		ms
ΔT_0	Power Stabilization		$6 \cdot t_{RTC}+\Delta T_1$	$7 \cdot t_{RTC}+\Delta T_1$	$8 \cdot t_{RTC}+\Delta T_1$	µs
ΔT_2	WAKEUP Pulse	RTC running		10		t_{RTC}
ΔT_3	ON_OFF Low		3			t_{RTC}
ΔT_4	ON_OFF High		3			t_{RTC}
ΔT_5	ON_OFF to WAKEUP high	After ON_OFF		6		t_{RTC}
ΔT_6	ON_OFF to ARM boot	After ON_OFF		2130		t_{RTC}

TABLE 12 – START-UP TIMING

19.2. AUTONOMOUS POWER ON

Connecting WAKEUP output (pad 5) to ON_OFF input (pad 6) enables self-start to Full Power state from Ready-To-Start state following boot process.
When host data interface is set UART, module will start autonomously transmitting NMEA messages after first power supply application. Further transfers between Full Power and Hibernate states require additional logic circuitry combined with serial command.

19.3. VERIFYING THE MODULE HAS STARTED

WAKEUP output will go high indicating module has started.
System activity indication depends upon selected serial interface.
The first message to come out of module is “OK_TO_SEND” - ‘$PSRF150,1*3E’.

19.3.1. UART

When active, the module will output NMEA messages at the 4800bps.

19.4. CHANGING PROTOCOL AND BAUD RATE[1]

Protocol and baud rate can be changed by NMEA $PSRF100 serial message.

19.5. CHANGING SATELLITE CONSTELLATION[1]

Satellite constellations used in position solution can be changed by OSP® Message ID 222 Sub ID 16.

19.6. SHUTTING DOWN THE MODULE

Transferring module from Full Power state to Hibernate state can be initiated in two ways:

- By a pulse on ON_OFF input.
- By OSP (MID205) serial message.

Orderly shutdown process may take anywhere from 10ms to 900ms to complete, depending upon operation in progress and messages pending, and hence is dependent upon serial interface speed and controls. Module will stay in Full Power state until TX FIFO buffer is emptied.
The last message during shutdown sequence is '$PSRF150,0*3F'.

Note:
1. Changes to default firmware settings are volatile and will be discarded at power re-cycle.

20. FIRMWARE

20.1. DEFAULT SETTINGS

Power On State		Hibernate
Default Interface[1]		UART
UART Settings		4,800bps.
UART Data Format		NMEA
Satellite Constellation		GPS + GLONASS
NMEA Messages		$GPGGA @1 sec.
		$GNGNS @ 1 sec.
		$GNGSA @ 1 sec.
		$GPGSV @ 5 sec.
		$GLGSV @ 5 sec.
		$GNRMC @ 1 sec.
Firmware Defaults	SBAS	OFF
	ABP™	OFF
	Static Navigation	ON
	Track Smoothing	OFF
	Jammer Detector	ON
	Jammer Remover	OFF
	Fast Time Sync	OFF
	Pseudo DR Mode	ON
	Power Saving Mode	OFF
	3SV Solution Mode	ON
	Data Logger	OFF
	5Hz Update Rate	OFF

TABLE 13 – DEFAULT FIRMWARE SETTINGS

20.2. FIRMWARE UPDATES

Firmware updates can be considered exclusively as patches on top of baseline ROM firmware. Those patch updates may be provided by OriginGPS to address ROM firmware issues as a method of performance improvement. Typical patch file size is 24KB.
Host controller is initiating load and application of patch update by communicating module's Patch Manager software block allocating 16KB of memory space for patch and additional 8KB for cache. Patch updates are preserved until BBRAM is discarded.

21. HANDLING INFORMATION

21.1. MOISTURE SENSITIVITY

ORG4502 modules are MSL 3 designated devices according to IPC/JEDEC J-STD-033B standard.

Module in sample or bulk package should be baked prior to assembly at 125°C for 48 hours.

21.2. ESD SENSITIVITY

This product is ESD sensitive device and must be handled with care.

21.3. SAFETY INFORMATION

Improper handling and use can cause permanent damage to the product.

21.4. DISPOSAL INFORMATION

This product must not be treated as household waste.

For more detailed information about recycling electronic components contact your local waste management authority.

22. MECHANICAL SPECIFICATIONS

- ORG4502 module has advanced miniature packaging and LGA footprint sized 28mm x 18.5m.
- ORG4502 connects via interface connector - 10 position, 0.50mm (.020") Pitch, FFC/FPC ZIF Right Angle, Molex p/n 527461071

TOP VIEW SIDE VIEW BOTTOM VIEW

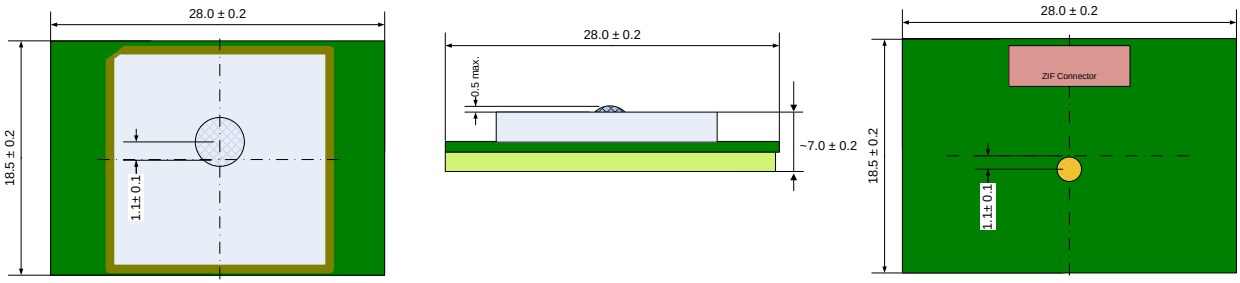

FIGURE 10 –ORG 4502 MECHANICAL DRAWING

Dimensions	Length	Width	Height
mm	28.0 ± 0.2	18.5 ± 0.2	7.0 ± 0.2
inch	1.102 ± 0.008	0.728 ± 0.008	0.276 ± 0.008

Weight	
gr	7.9
oz	0.28

TABLE 14 –ORG4502 MECHANICAL INFORMATION

23. COMPLIANCE

The following standards are applied on the production of ORG4502 modules:

- IPC-6011/6012 Class2 for PCB manufacturing
- IPC-A-600 Class2 for PCB inspection
- IPC-A-610D Class2 for SMT acceptability

ORG4502 modules are manufactured in ISO 9001:2008 accredited facilities.
ORG4502 modules are manufactured in ISO 14001:2004 accredited facilities.
ORG4502 modules are manufactured in OHSAS 18001:2007 accredited facilities.
ORG4502 modules are designed, manufactured and handled in compliance with the Directive 2011/65/EU of the European Parliament and of the Council of June 2011 on the Restriction of the use of certain Hazardous Substances in electrical and electronic equipment, referred as RoHS II.
ORG4502 modules are manufactured and handled in compliance with the applicable substance bans as of Annex XVII of Regulation 1907/2006/EC on Registration, Evaluation, Authorization and Restriction of Chemicals including all amendments and candidate list issued by ECHA, referred as REACH.
ORG4502 modules comply with the following EMC standards:

- EU CE EN55022:06+A1(07), Class B
- US FCC 47CFR Part 15:09, Subpart B, Class B
- JAPAN VCCI V-3/2006.04

24. PACKAGING AND ORDERING INFORMATION

Supplied in a tray.
Minimum order quantity: 300 pcs.

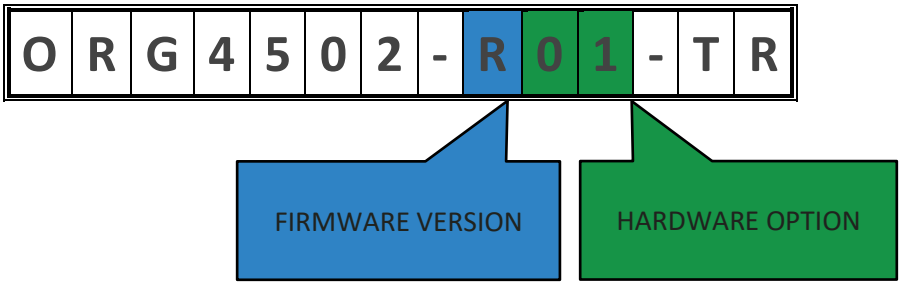

TABLE 15 – ORDERING OPTIONS

PART NUMBER	FW VERSION	HW OPTION	V_{CC} RANGE	PACKAGING	MOQ
ORG4502-R01-TR	1	01	2.1-5V	Tray	300
ORG4502-R01-UAR	1	01	5V USB	EVALUATION KIT	1

TABLE 16 – ORDERABLE DEVICES

Recommender ZIF cable: Manufacturer: Molex, P.N. 0982660107
For more ZIF cable options: press here