ORG4600-B01 (SPIDER)

Evaluation Kit (ORG4600B01-UAR)

DATASHEET

OriginGPS.com

TABLE OF CONTENTS

1. About Spider Family 1
2. About Spider Module 2
3. About OriginGPS 3
4. Description 4
5. Default EVK State 5
   5.1. ORG4600-B01 Evaluation Kit – Overview 5
   5.2. PCB View 6
   5.3. Flow Chart - Interfaces 7
   5.4. Flow Chart - Power Supply Components 8
6. Schematics 9
7. Bill of Materials 11
8. Assembly and Layout 12
   8.1. ORG600-B01 - Main Board 12
   8.2. Adapter Board 14
9. Ordering Information 16

LIST OF FIGURES

Figure 1. Up Position on PCB .....
Figure 2. EVK PCB 6
Figure 5. Schematics Page 1 9
Figure 6. Schematics Page 2 9
Figure 7. Schematics Page 3 10
Figure 8. Adapter Schematics Page 10
Figure9. Main Board Components Placement (Top Side) 12
Figure 10. Main Board Components Placement (Bottom Side) 12
Figure 11. Gerber Top Side CS Layer 13
Figure 12. Gerber Bottom Side PS Layer 13
Figure 13. Interface Adapter Board Components Placement 14
Figure 14. Interface Adapter Board Solder Mask 14
Figure 15. Interface Adapter Board Top Layer Routing 14
Figure 16. Interface Adapter Layer 1 Routing 15
Figure 17. Interface Adapter Layer 2 Routing 15
Figure 18. Interface Adapter Bottom Layer Routing 15

LIST OF TABLES

Table 1. Bill of Materials.....11
Table 2. Orderable Devices 16

ABBREVIATIONS

Abbreviation	Description
BOM	Bill Of Materials
CS	Component Side
CTS	Clear to Send
DOK	Disk On Key
ESD	Electronic Sensitive Device
EVK	Evaluation Board
FW	Firmware
GLONASS	GLObal NAvigation Satellite System – Russian Satellite Positioning System
GND	Ground
GNSS	Global Navigation Satellite System
GPS	Global Positioning System – American Satellite Positioning System
IC	Integrated Circuit
IO	Input/Output
IOH	High Level of IO Value
IOL	Low Level of IO Value
LDO	Low Dropout Regulator
LGA	Low Gain Amplifier
LVTTL	Low voltage Transistor–transistor Logic
NFZ	Noise Free Zone
NMEA	National Marine Electronics Association Protocol
PC	Personal Computer
PCB	Printed Circuit Board
PCN	Pseudo-Random Noise
PS	Printed Side
QZSS	Quasi-Zenith Satellite System - Japanese satellite positioning system
RF	Radio Frequency

Abbreviation	Description
RTS	Ready To Send
RXD	Receive Data
SBAS	Satellite-based Augmentation Systems
SiP	System In Package
SMT	Surface-Mount Technology
SoC	System on Chip
TAMB	temperature for Absolute Maximum
TTFF	Time To First Fix
TTL	Transistor–Transistor Logic
TTM	Time-to-Market
TXD	Transmit Data
UART	Universal Asynchronous Receiver Transmitter
USB	Universal Serial Bus
Vbat	Battery Voltage
Vcc	Common Collector Voltage
VBUS	Bus Voltage
VHYST	Hysteresis Voltage
VIN	Input Voltage
VOH	High level Output Voltage
VOL	Low level Output Voltage

Related Documentation

№	Document Name
1	ORG4600-B01 Datasheet

REVISION CHANGES

Revision	Date	Change Description
1.0	November 7, 2019	
1.1	February 6, 2020	Added block diagrams, additional explanations on using the OriginGPS EVB and ordering information.
1.2	March 2, 2020	Update ORG4600-B01 Evaluation Kit – Overview figures
1.3	June 28, 2020	Update Force_On - Evaluation Kit -Overview

Scope

This document describes the features and specifications of the ORG4600-B01 Evaluation kit.

Disclaimer

All trademarks are properties of their respective owners.

Performance characteristics listed in this document do not constitute a warranty or guarantee of product performance. OriginGPS assumes no liability or responsibility for any claims or damages arising out of the use of this document, or from the use of integrated circuits based on this document.

OriginGPS assumes no liability or responsibility for unintentional inaccuracies or omissions in this document.

OriginGPS reserves the right to make changes in its products, specifications, and other information at any time without notice.

OriginGPS reserves the right to conduct, from time to time, and at its sole discretion, firmware (FW) upgrades. If those FW improvements have no material change on end customers, PCN may not be issued. OriginGPS navigation products are not recommended to use in life-saving or life-sustaining applications.

Safety Information

Incorrect handling and use can cause permanent damage to the product.

ESD Sensitivity

This product is an ESD-sensitive device and must be handled with care.

Contact Information

contactus@origingps.com www.origingps.com

1. About Spider Family

OriginGPS GNSS receiver modules have been designed to address markets where size, weight, standalone operation, highest level of integration, power consumption and design flexibility—are all very important. OriginGPS' Spider family breaks the size barrier, offering the industry's smallest, fully integrated, highly sensitive GPS / GNSS modules.

The Spider family features OriginGPS's proprietary NFZ™ technology for high sensitivity and noise immunity even under marginal signal condition, commonly found in urban canyons, under dense foliage, or when the receiver's position in space rapidly changes.

Spider modules enable the shortest TTM (Time-To-Market) with minimal design risks.

Just connect an antenna and power supply on a 2-layer PCB.

2. About Spider Module

The OR4600 module is a complete SiP that features a miniature LGA SMT footprint designed to commit unique integration features for high volume, cost sensitive applications.

Designed to support compact and traditional applications such as smart watches, wearable devices, asset trackers, the ORG4600-B01 module is a miniature, multi-channel GPS, Galileo and GLONASS, SBAS, QZSS in both the L1/B1/E1 and L5/E5a overlay systems receiver that continuously tracks all satellites in view, providing real-time positioning data in industry's standard NMEA format.

The ORG4600-B01 module offers superior sensitivity and outstanding performance, achieving rapid TTFF in less than one second with an accuracy of approximately one meter and tracking sensitivity of -167dBm.

With a size of only 10mm x 10mm, the ORG4600-B01 module is the industry's smallest-sized solution.

The ORG4600-B01 module introduces the industry's lowest energy-per-fix ratio, unparalleled accuracy and extremely rapid fixes even under challenging signal conditions such as in built-up urban areas, dense foliage, or even indoors.

An integrated GNSS SoC incorporates a high-performance microprocessor and sophisticated firmware that keeps positioning payload off the host, enabling integration in embedded solutions with low computing resources.

Innovative architecture can detect changes in context, temperature, and satellite signals to achieve a state of near continuous availability by maintaining and opportunistically updating its internal fine time, frequency, and satellite ephemeris data while consuming mere microwatts of battery power.

3. About OriginGPS

OriginGPS develops, manufactures and supplies the world's smallest GNSS and cellular IoT solutions.

Our high-performance miniature GNSS products provide multiple constellation support to help you track everything valuable to you and your business. The OriginIoT™ makes IoT-enabling devices affordable and accessible by eliminating the need for additional embedded software and RF engineering knowhow. The low power cellular IoT system reduces project costs and dramatically shortens time-to-market when you develop cellular IoT devices.

OriginGPS miniature products are ideal for market verticals, such as asset tracking, fleet management, industrial IoT, law enforcement, pet/people tracking, precision agriculture, smart cities, sports and wearables.

4. DESCRIPTION

The Evaluation Kit of the ORG4600-B01 GNSS Antenna Module comprises the demo board, a USB to UART cable, and DOK with GNSS simulator software for PC, and documentation.

The demo board is built of a main board, incorporating 1.8V and 3.3V LDO regulators, a UART connector, a push-button, and various test points with a range of features for R&D processes.

In addition, it supports external active / passive antennas connected to wFL connectors.

5. DEFAULT EVK STATE

5.1. ORG4600-B01 Evaluation Kit – Overview

The following section introduces the mail elements of the evaluation kit and describes how they work together.

- J8 – Vcc connected to an internal LDO 3.3V.
- J10- Force_On connected to 3.3V.
- J22 – Vbat, connected to Vcc, supplies power to the active antenna.
- J29 – TX is connected via a level shifter to J26.
- J26 – Enables switching UART to an FTDI cable or micro USB connector.

The "Up" position, shown in the below figure depicts a state using the micro USB cable.

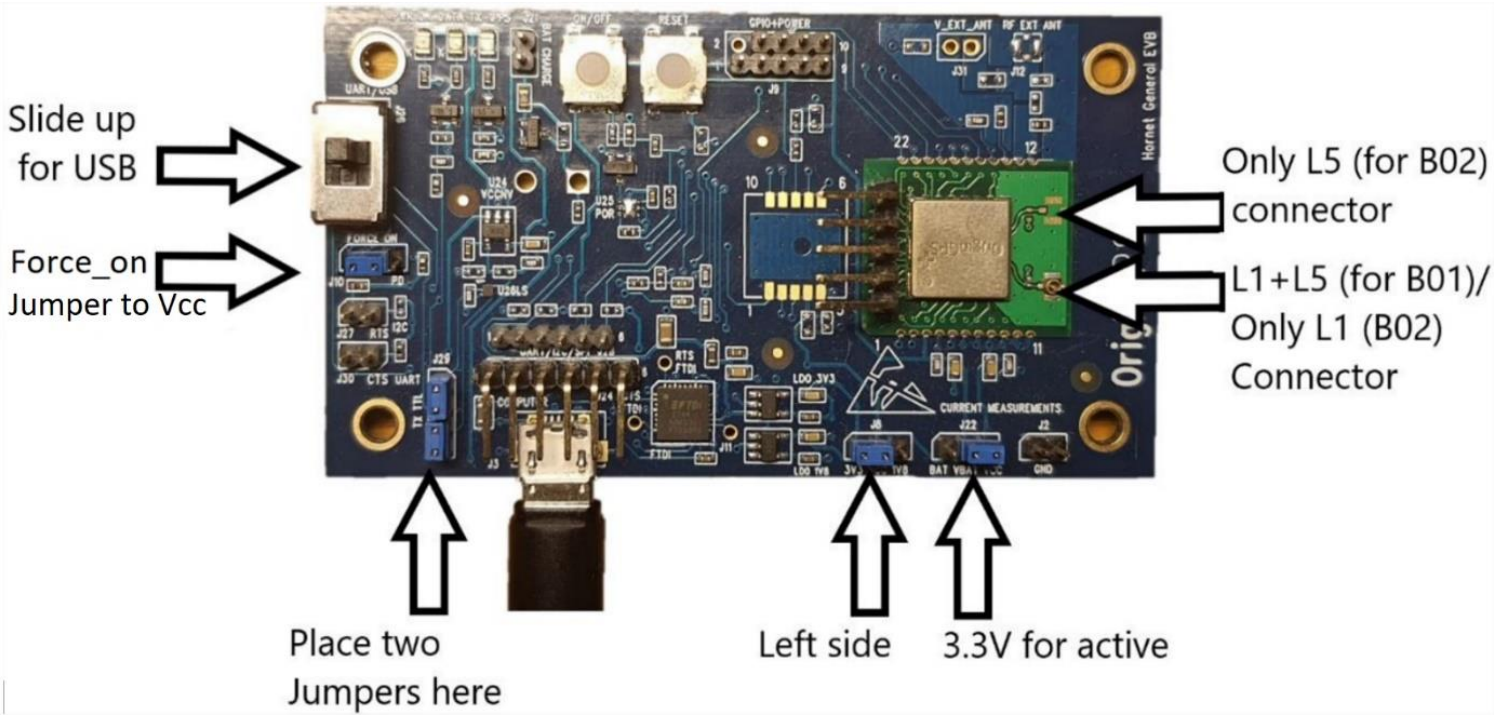

Figure 1. Up Position on PCB

5.2. PCB View

The below figure depicts the functionality available on the board. The silkscreen in this view enables a better understanding of the board.

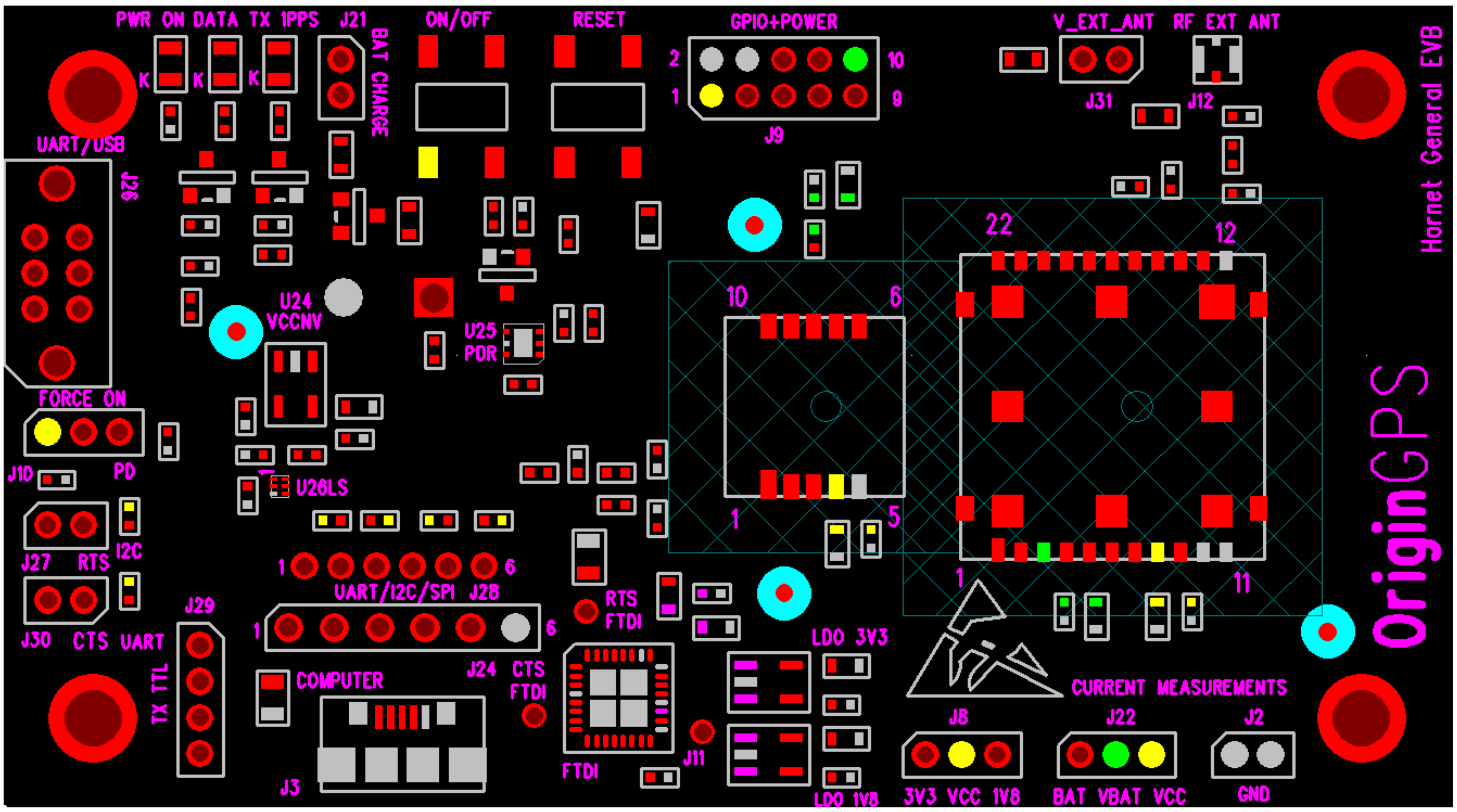

Figure 2. EVK PCB

5.3. Flow Chart - Interfaces

The below Figure depicts the functionality of the board, specifically relating to the interfaces and the toggle options to control the OriginGPS Evaluation Kit.

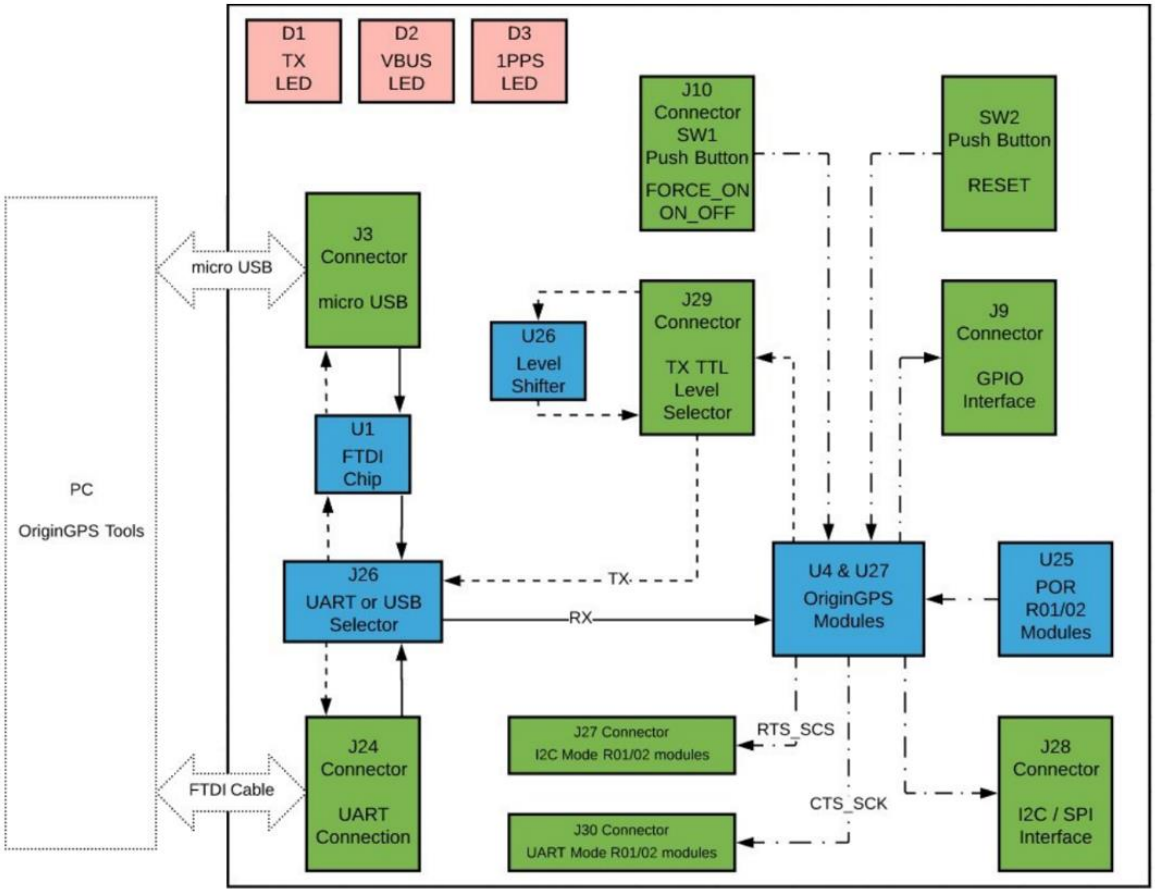

Figure 3. Flow Chart - Interfaces

5.4. Flow Chart - Power Supply Components

The below Figure depicts the functionality of the board, specifically relating to the power source components. The diagram enables viewing the power supply components, the connectors and the toggle options to control the OriginGPS Evaluation Kit.

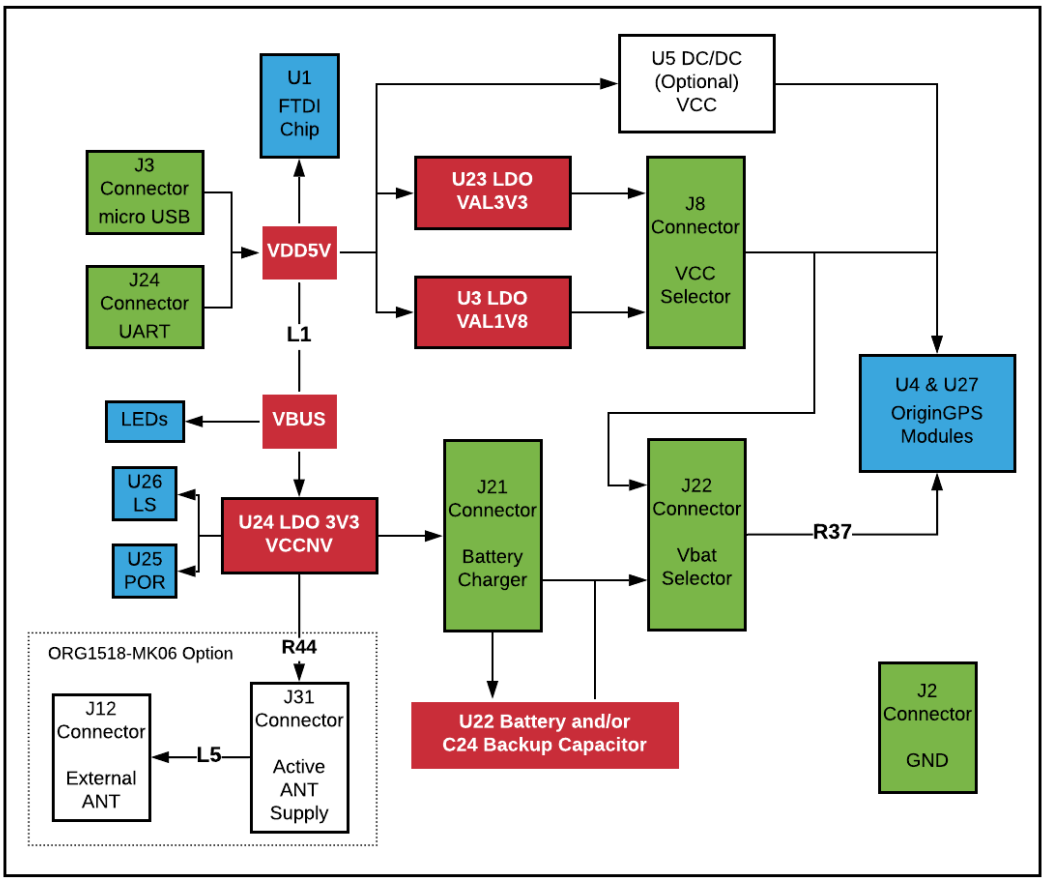

Figure 4. Flow Chart – Power Supply Components

6. SCHEMATICS

The ORG4600-B01 Evaluation Kit can be used for all OriginGPS modules; Spider, and Hornet. Therefore, while schematics contain all the components, the BOM is necessary to understand the assembled components for the ORG4600-B01 module.

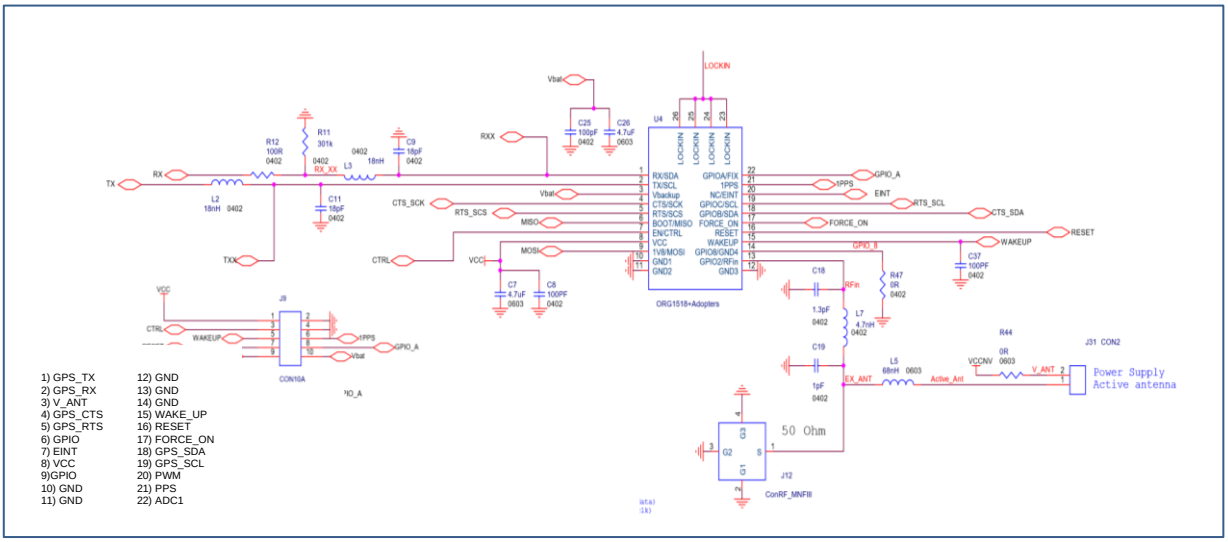

Figure 5. Schematics Page 1

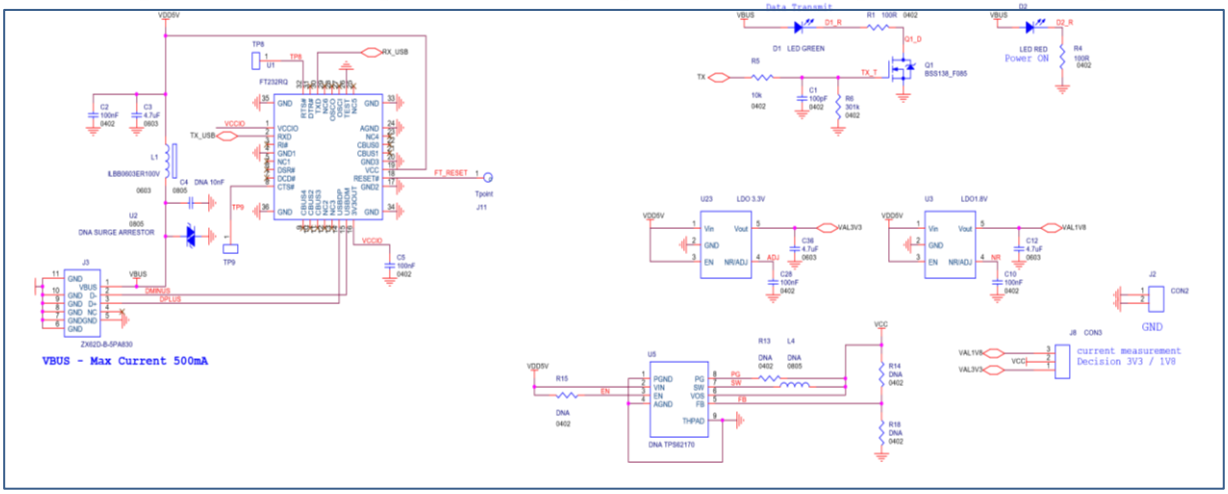

Figure 6. Schematics Page 2

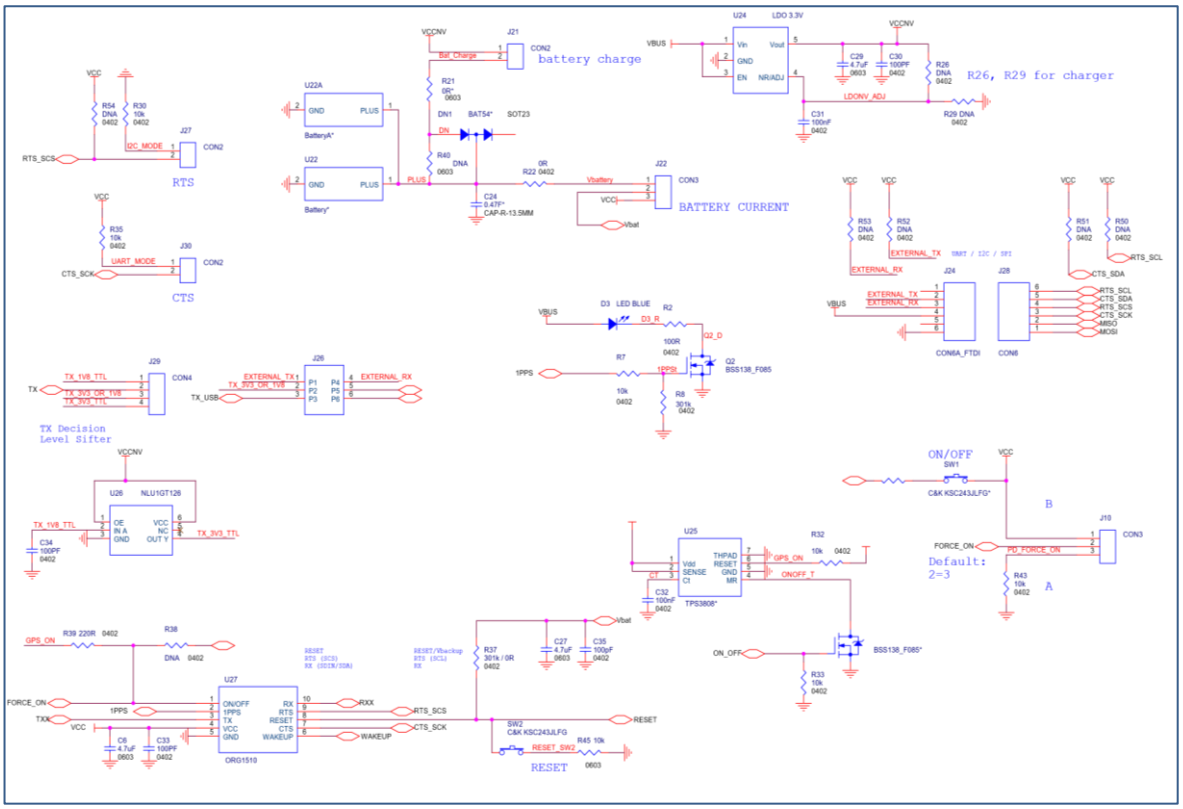

Figure 7. Schematics Page 3

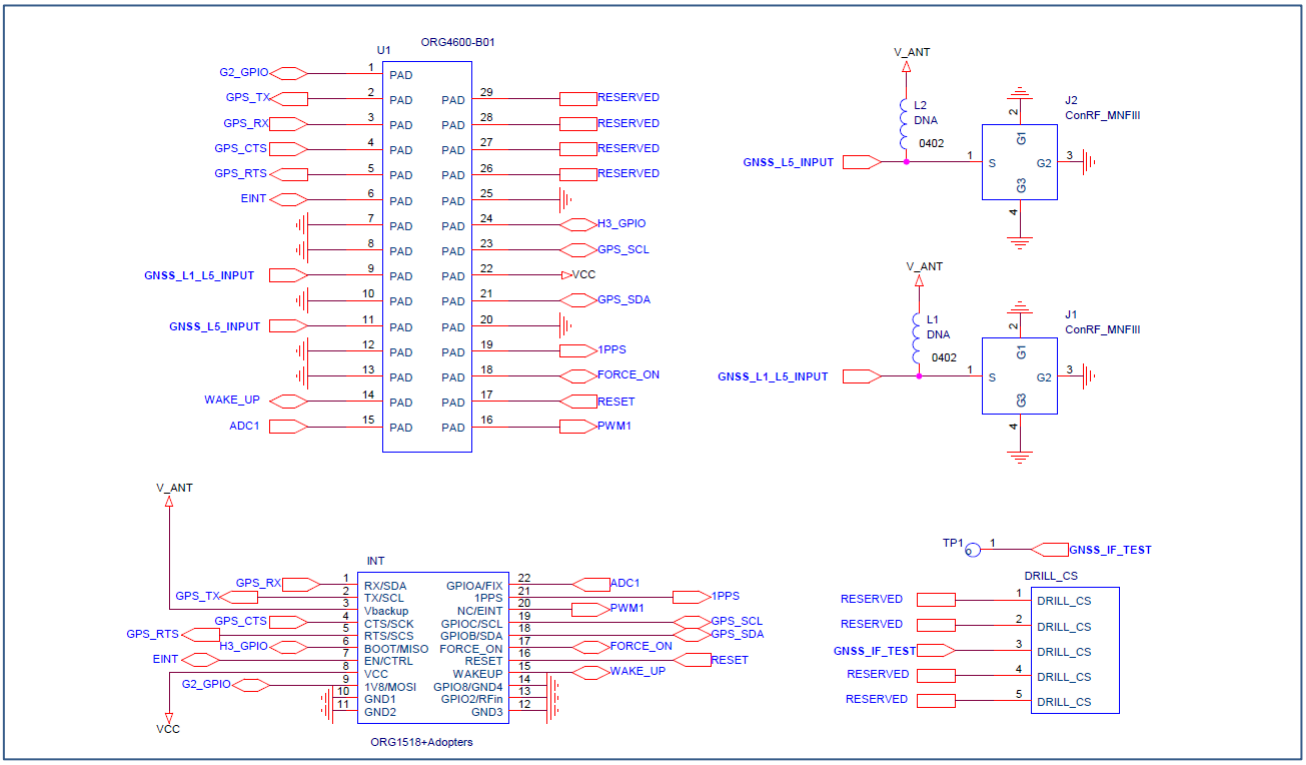

Figure 8. Adapter Schematics Page

7. BILL OF MATERIALS

Table 1. Bill of Materials

Refernce	Value	Description	P/N	MFG
R22, R38, R47, C18	0Ω	RES SMT 0402 0Ω ±5%	CRCW04020000Z0ED	VISHAY
R5, R7, R30, R32, R33, R35, R43	10KΩ	0	CRCW040210K0FKED	VISHAY
C9, C11	18pF	CAP SMT 0402 18pF ±5% 50V COG	GRM1555C1H180JA01D	MURATA
C2, C5, C10, C28, C31, C32	100nF	CAP SMT 0402 100nF ±10% 16V X7R	GRM155R71C104KA88D	MURATA
U3	LDO	LDO 1.8V	TLV70018DDCT	Texas Instruments
U23, U24	LDO	LDO 3.3V	TLV70033DDCT	Texas Instruments
C1, C8, C25, C30, C34, C37	100pF	CAP SMT 0402 100pF ±5% 50V COG	GRM1555C1H101JA01D	MURATA
L2, L3	18nH	CHIP EMIFIL INDUCTOR 18nH 5%	LQG15HS18NJ02D	MURATA
C3, C7, C12, C26, C29, C36	4.7uF	CAP SMT 0603 4.7uF ±10% 6.3V X5R	GRM188R60J475KE19D	MURATA
R6, R8, R11, R37	301KΩ	RES SMT 0402 301KΩ ±1%	CRCW 0402 -301K	VISHAY
U26	SB3S	Single Buffer 3 STATE	NLU1GT126CMUTCG	ON
R1, R2, R4, R12	100Ω	RES SMT 0402 100Ω ±1%	RM04FTN1000	TA-I
R21	0Ω	RES SMT 0603 0Ω ±5%	CRCW06030000Z0EA	VISHAY
SW1, SW2	SW	SMD TACT SWITCH	TJ-532-V-T/R	DIPTRONICS
J24	HDR	CON6A_FTDI	2211S-06G-F1	NELTRON
Q1, Q2, Q21	Transisor	BSS138_F085	BSS138_F085	ON Semiconductor
J3	u-USB	microUSB	ZX65D-B-5PA830	Hirose Connector
R3	220Ω	220R 0402	RM04F2200CT	TA-I
C4	10nF	0.01uF (10nF) 50V 0805	GCM219R91H103KA37D	MURATA
D3	LED	LED Blue SMT 0805 20mA	APT2012QBC/D	Kingbright
D1	LED	LED Green Water Clear SMT 0805 20mA	APT2012SGC	Kingbright
D2	LED	LED RED Water Clear SMT 0805 20mA	APT2012SRCPRV	Kingbright
L1	10	10R 25% FERRITE BEADS 0603	ILBB0603ER100V	VISHAY
U1	Convertor	FT232R Single Ch FTDI USB Interface IC	FT232RQ-TRAY	FTDI
DN1	schottky diode	200mA Fairchild SchoTtky Diodes & Rectifiers	BAT54S	VISHAY
U2	Zener diode	uppressors / TVS Diodes WE-VE ESD 0805 12V	82350120560	WURTH
U4	Adapter	ORG4600 Adapter	ORG4600 Adapter	OriginGPS
J2, J21, J27, J30	jumper	CON2	M22-2510205	Harwin
J8, J10 ,J22	jumper	CON3	M22-2510305	Harwin
J29	jumper	CON4	M22-2510405	Harwin
J28	HDR	CON6	M22-2510605	Harwin
J9	HDR	CON9A (Without Pad 2)	M22-2510505	Harwin
J26	ESW	12VDC 0.1 AMP E-SWITCH Slide Switches	EG2209	E-SWITCH

8. Assembly and Layout

8.1. ORG600-B01 - Main Board

The main board of the ORG4600-B01 comprises 2 layers with thickness of 1.6mm FR4 PCB.

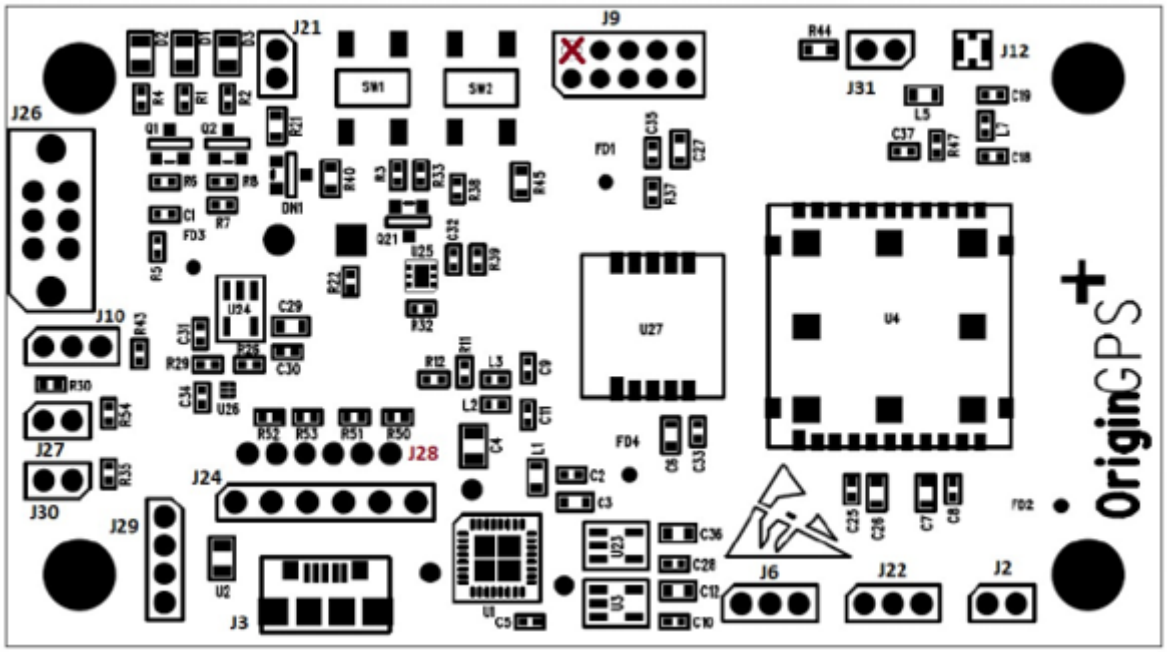

Figure9. Main Board Components Placement (Top Side)

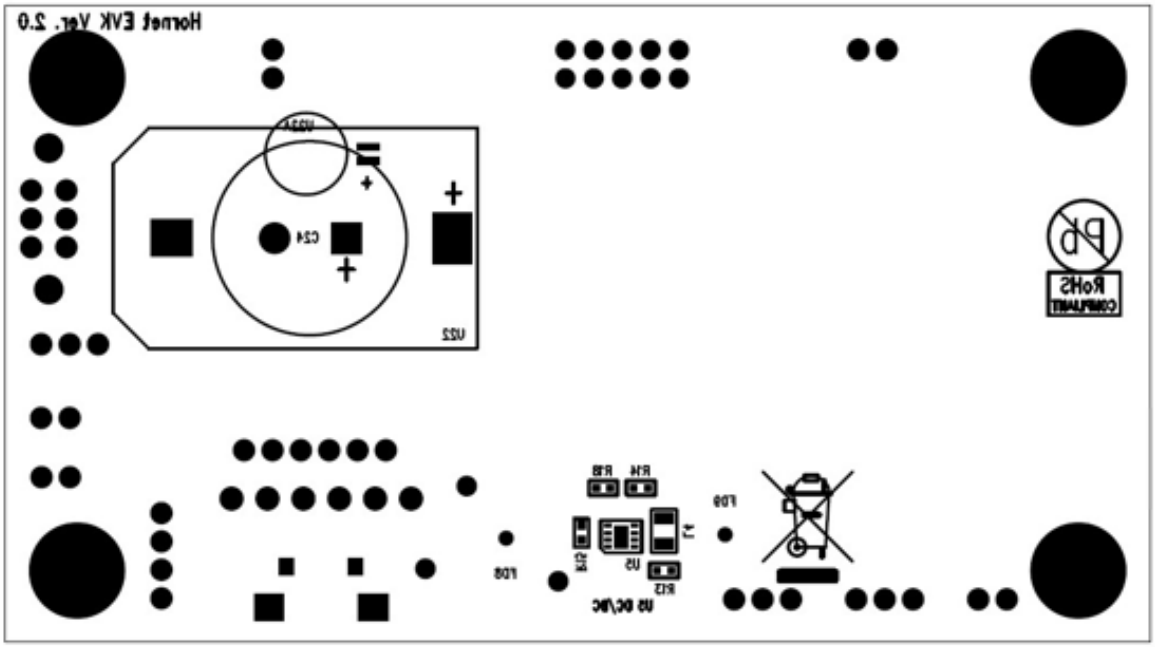

Figure 10. Main Board Components Placement (Bottom Side)

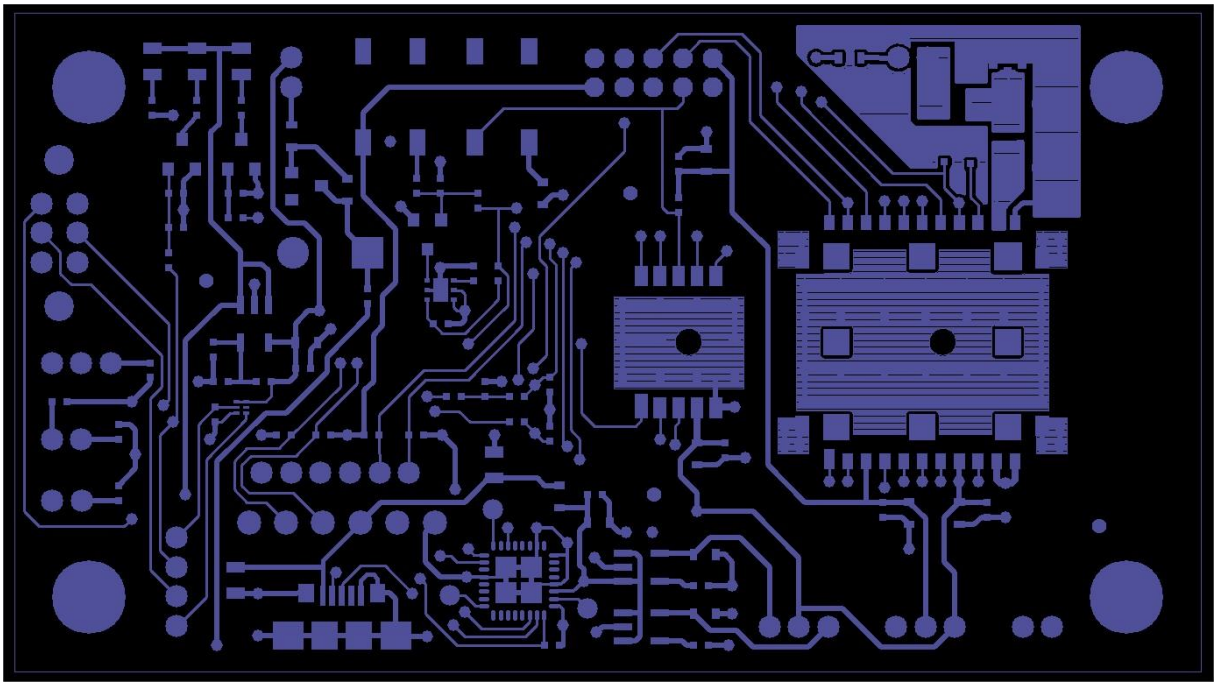

Figure 11. Gerber Top Side CS Layer

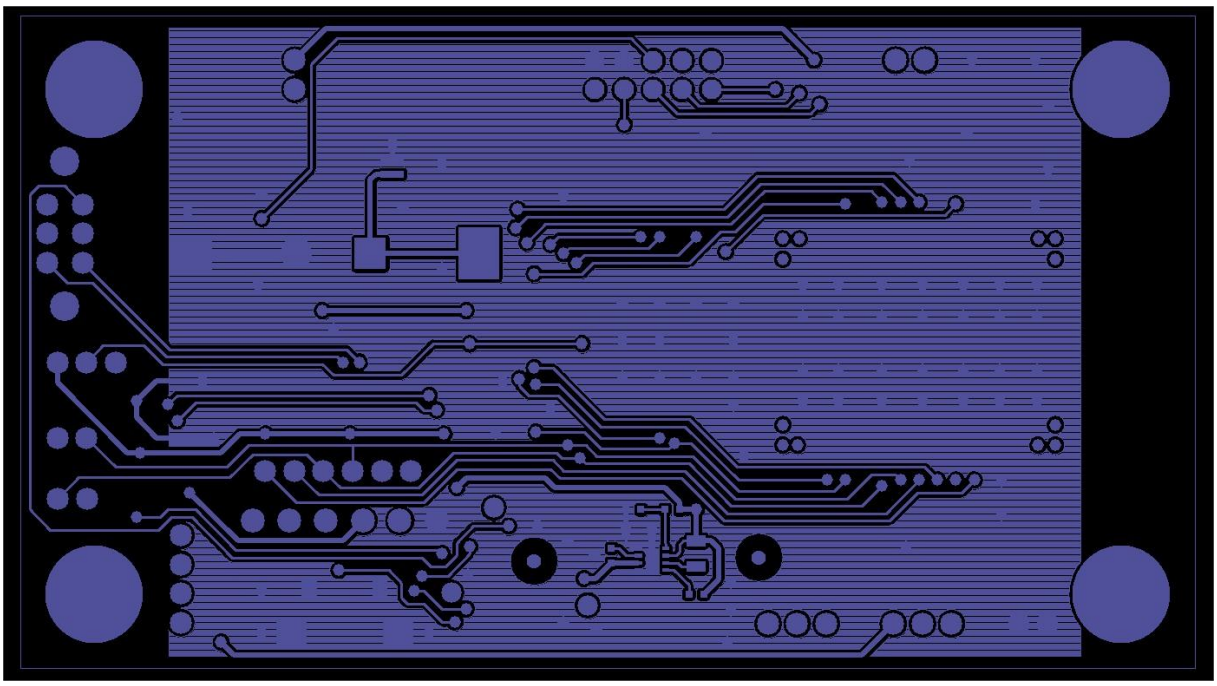

Figure 12. Gerber Bottom Side PS Layer

8.2. Adapter Board

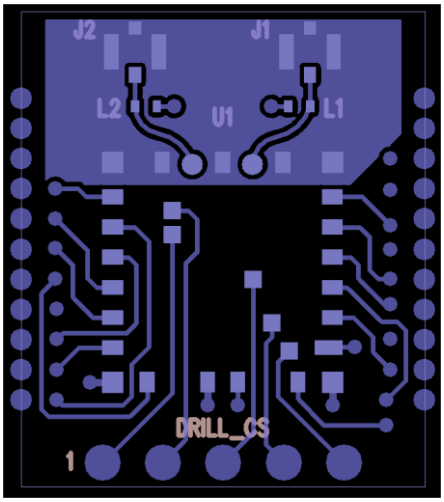

Figure 13. Interface Adapter Board Components Placement

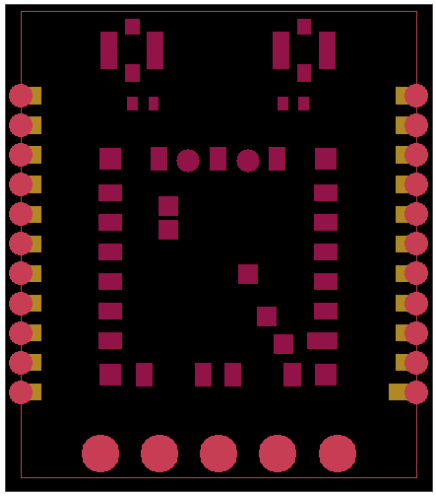

Figure 14. Interface Adapter Board Solder Mask

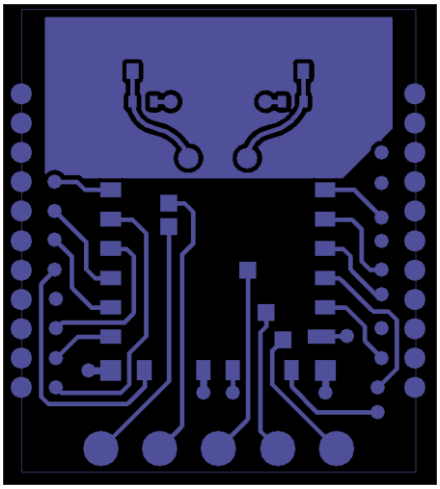

Figure 15. Interface Adapter Board Top Layer Routing

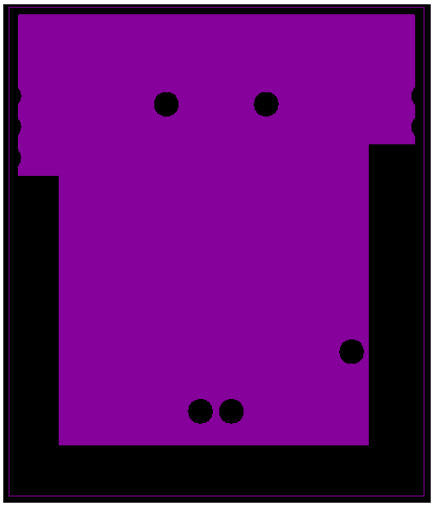

Figure 16. Interface Adapter Layer 1 Routing

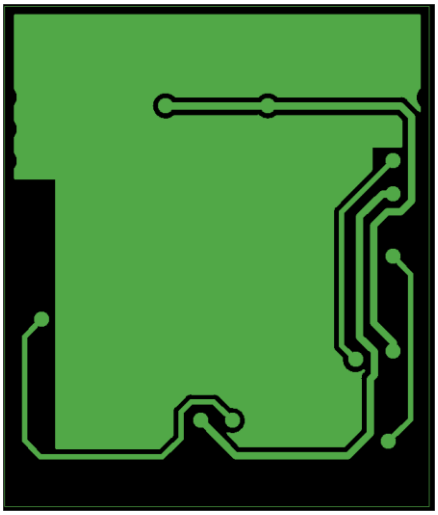

Figure 17. Interface Adapter Layer 2 Routing

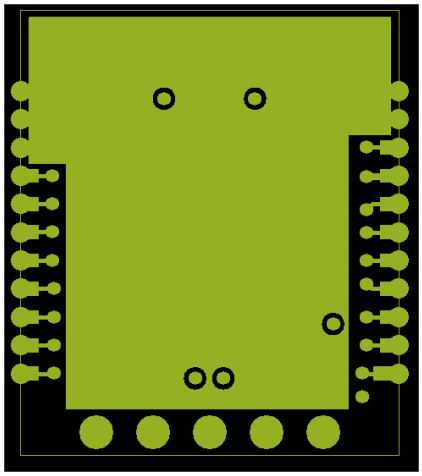

Figure 18. Interface Adapter Bottom Layer Routing

9. ORDERING INFORMATION

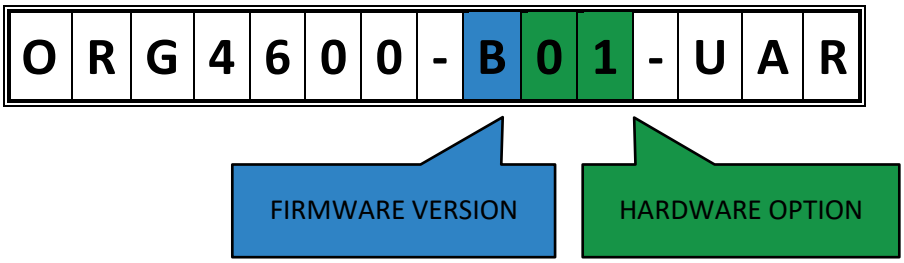

Table 2. Orderable Devices

Part Number	Firmware Version	Hardware Option	VCC Range	Packaging	SPQ
ORG4600-B01-UAR	B	01	5V USB	Evaluation Kit	1