ORG4572-MK05 (SPIDER)

Evaluation Kit (ORG4572-MK05-UAR)

DATASHEET

OriginGPS.com

TABLE OF CONTENTS

LIST OF FIGURES

LIST OF TABLES

ABBREVIATIONS

Abbreviation	Description
BOM	Bill Of Materials
CS	Component Side
CTS	Clear to Send
DOK	Disk On Key
ESD	Electronic Sensitive Device
EVK	Evaluation Board
FW	Firmware
GLONASS	GLObal NAvigation Satellite System – Russian Satellite Positioning System
GND	Ground
GNSS	Global Navigation Satellite System
GPS	Global Positioning System – American Satellite Positioning System
IC	Integrated Circuit
IO	Input/Output
IOH	High Level of IO Value
IOL	Low Level of IO Value
LDO	Low Dropout Regulator
LGA	Low Gain Amplifier
LVTTL	Low voltage Transistor–transistor Logic
NFZ	Noise Free Zone
NMEA	National Marine Electronics Association Protocol
PC	Personal Computer
PCB	Printed Circuit Board
PCN	Pseudo-Random Noise
PS	Printed Side
QZSS	Quasi-Zenith Satellite System - Japanese satellite positioning system

Abbreviation	Description
RF	Radio Frequency
RTS	Ready To Send
RXD	Receive Data
SBAS	Satellite-based Augmentation Systems
SiP	System In Package
SMT	Surface-Mount Technology
SoC	System on Chip
TAMB	temperature for Absolute Maximum
TTFF	Time To First Fix
TTL	Transistor–Transistor Logic
TTM	Time-to-Market
TXD	Transmit Data
UART	Universal Asynchronous Receiver Transmitter
USB	Universal Serial Bus
Vbat	Battery Voltage
Vcc	Common Collector Voltage
VBUS	Bus Voltage
VHYST	Hysteresis Voltage
VIN	Input Voltage
VOH	High level Output Voltage
VOL	Low level Output Voltage

Related Documentation

№	Document Name
1	ORG4572-MK05 Datasheet

REVISION CHANGES

Revision	Date	Change Description
1.0	January 30, 2022	

Scope

This document describes the features and specifications of the ORG4572-MK05 Evaluation kit.

Disclaimer

All trademarks are properties of their respective owners.

Performance characteristics listed in this document do not constitute a warranty or guarantee of product performance. OriginGPS assumes no liability or responsibility for any claims or damages arising out of the use of this document, or from the use of integrated circuits based on this document.

OriginGPS assumes no liability or responsibility for unintentional inaccuracies or omissions in this document.

OriginGPS reserves the right to make changes in its products, specifications, and other information at any time without notice.

OriginGPS reserves the right to conduct, from time to time, and at its sole discretion, firmware (FW) upgrades. If those FW improvements have no material change on end customers, PCN may not be issued. OriginGPS navigation products are not recommended to use in life-saving or life-sustaining applications.

Safety Information

Incorrect handling and use can cause permanent damage to the product.

ESD Sensitivity

This product is an ESD-sensitive device and must be handled with care.

Contact Information

contactus@origingps.com www.origingps.com

1. About Spider Family

OriginGPS GNSS receiver modules have been designed to address markets where size, weight, standalone operation, highest level of integration, power consumption and design flexibility—are all very important. OriginGPS' Spider family breaks the size barrier, offering the industry's smallest, fully integrated, highly sensitive GPS / GNSS modules.

The Spider family features OriginGPS's proprietary NFZ™ technology for high sensitivity and noise immunity even under marginal signal condition, commonly found in urban canyons, under dense foliage, or when the receiver's position in space rapidly changes.

Spider modules enable the shortest TTM (Time-To-Market) with minimal design risks.

Just connect an antenna and power supply on a 2-layer PCB.

2. About Spider Module

The ORG4572-MK05 module is a complete SiP that features a miniature LGA SMT footprint designed to commit unique integration features for high volume, cost sensitive applications.

Designed to support compact and traditional applications such as smart watches, wearable devices, asset trackers, the ORG4572-MK05 module is a miniature, multi-channel GPS, Galileo, GLONASS or GPS BeiDou, and SBAS, QZSS receiver that continuously tracks all satellites in view, providing real-time positioning data in industry's standard NMEA format.

With a size of only 7mm x 7mm, the ORG4572-MK05 module is the industry's smallest-sized solution.

The ORG4572-MK05 module introduces the industry's lowest energy-per-fix ratio, unparalleled accuracy and extremely rapid fixes even under challenging signal conditions such as in built-up urban areas, dense foliage, or even indoors.

An integrated GNSS SoC incorporates a high-performance microprocessor and sophisticated firmware that keeps positioning payload off the host, enabling integration in embedded solutions with low computing resources.

Innovative architecture can detect changes in context, temperature, and satellite signals to achieve a state of near continuous availability by maintaining and opportunistically updating its internal fine time, frequency, and satellite ephemeris data while consuming mere microwatts of battery power.

3. About OriginGPS

OriginGPS develops, manufactures and supplies the world's smallest GNSS and cellular IoT solutions.

Our high-performance miniature GNSS products provide multiple constellation support to help you track everything valuable to you and your business. The OriginIoT™ makes IoT-enabling devices affordable and accessible by eliminating the need for additional embedded software and RF engineering knowhow. The low power cellular IoT system reduces project costs and dramatically shortens time-to-market when you develop cellular IoT devices.

OriginGPS miniature products are ideal for market verticals, such as asset tracking, fleet management, industrial IoT, law enforcement, pet/people tracking, precision agriculture, smart cities, sports and wearables.

4. DESCRIPTION

The Evaluation Kit of the ORG4572-MK05 GNSS Module comprises the demo board, a USB to UART cable, and DOK with GNSS simulator software for PC, and documentation.

The demo board is built of a main board, incorporating 1.8V and 3.3V LDO regulators, a UART connector, a push-button, and various test points with a range of features for R&D processes.

In addition, it supports external active / passive antennas connected to W.FL connector.

5. DEFAULT EVK STATE

5.1. ORG4572-MK05 Evaluation Kit – Overview

The following section introduces the mail elements of the evaluation kit and describes how they work together.

- J8 – Vcc connected to an internal LDO 3.3V.
- J10 – FORCE_ON connected to pull-down resistor.
- J22 – Vbat connected to Vcc, supplies power to the active antenna.
- J29 – TX is connected directly to J26 without level-shifter.
- J26 – Enables switching UART to an FTDI cable or micro-USB connector.

The "Up" position, shown in the figure below depicts a state using the micro-USB cable.

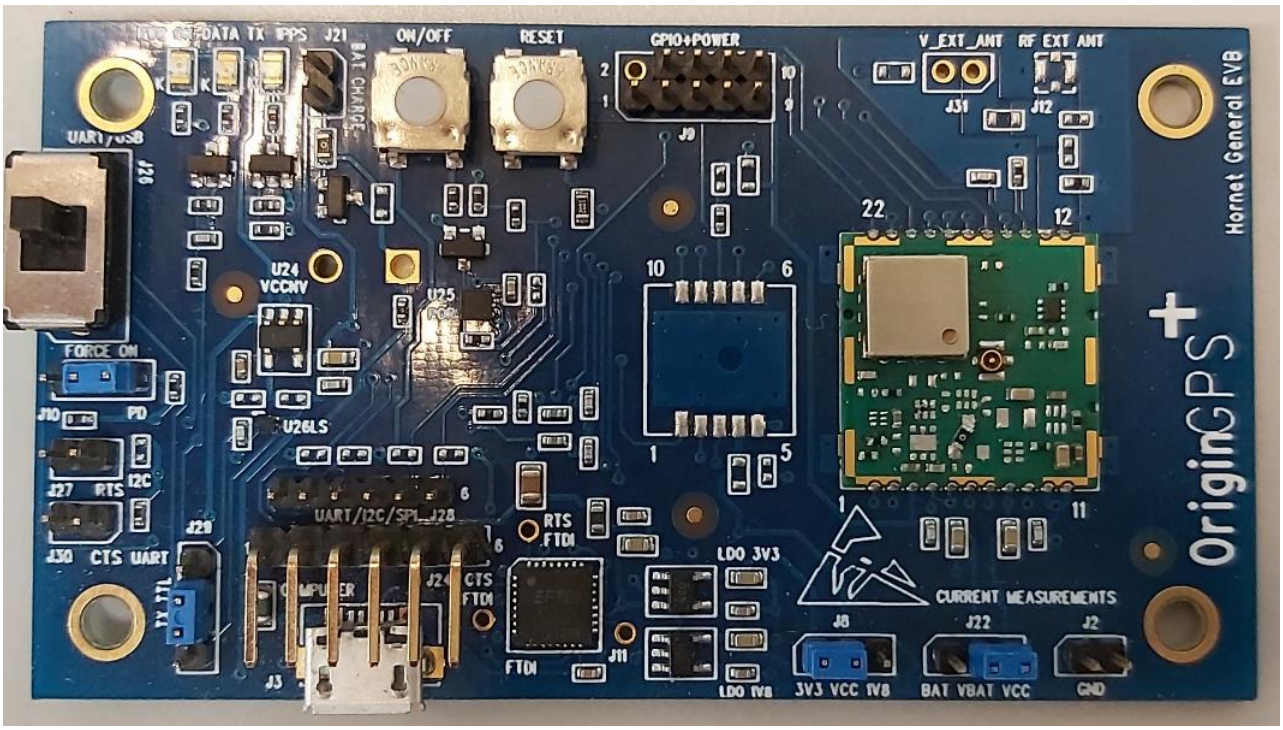

Figure 1. Evaluation Board

5.2. PCB View

The below figure depicts the functionality available on the board. The silkscreen in this view enables a better understanding of the board.

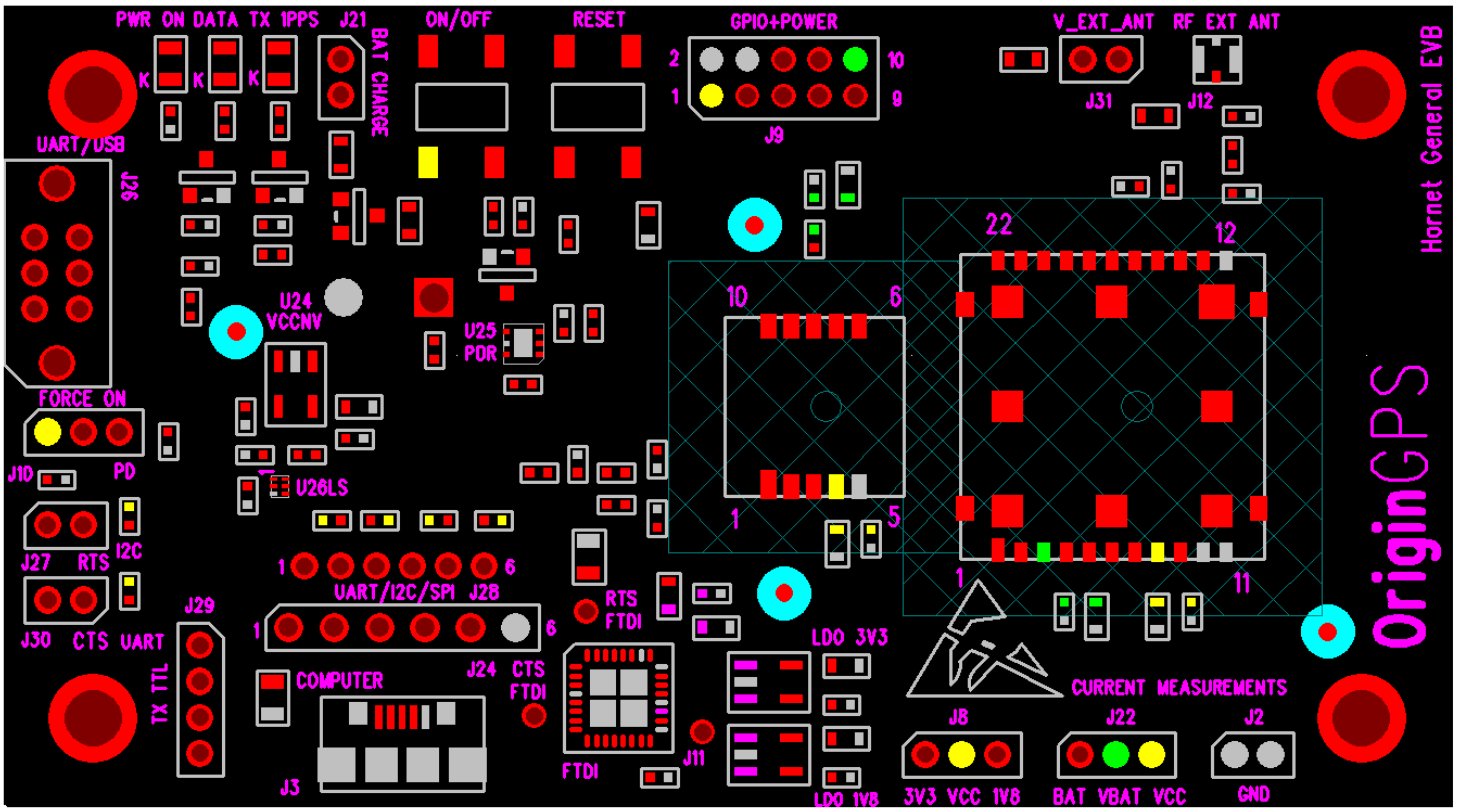

Figure 2. EVK PCB

5.3. Flow Chart - Interfaces

The below Figure depicts the functionality of the board, specifically relating to the interfaces and the toggle options to control the OriginGPS Evaluation Kit.

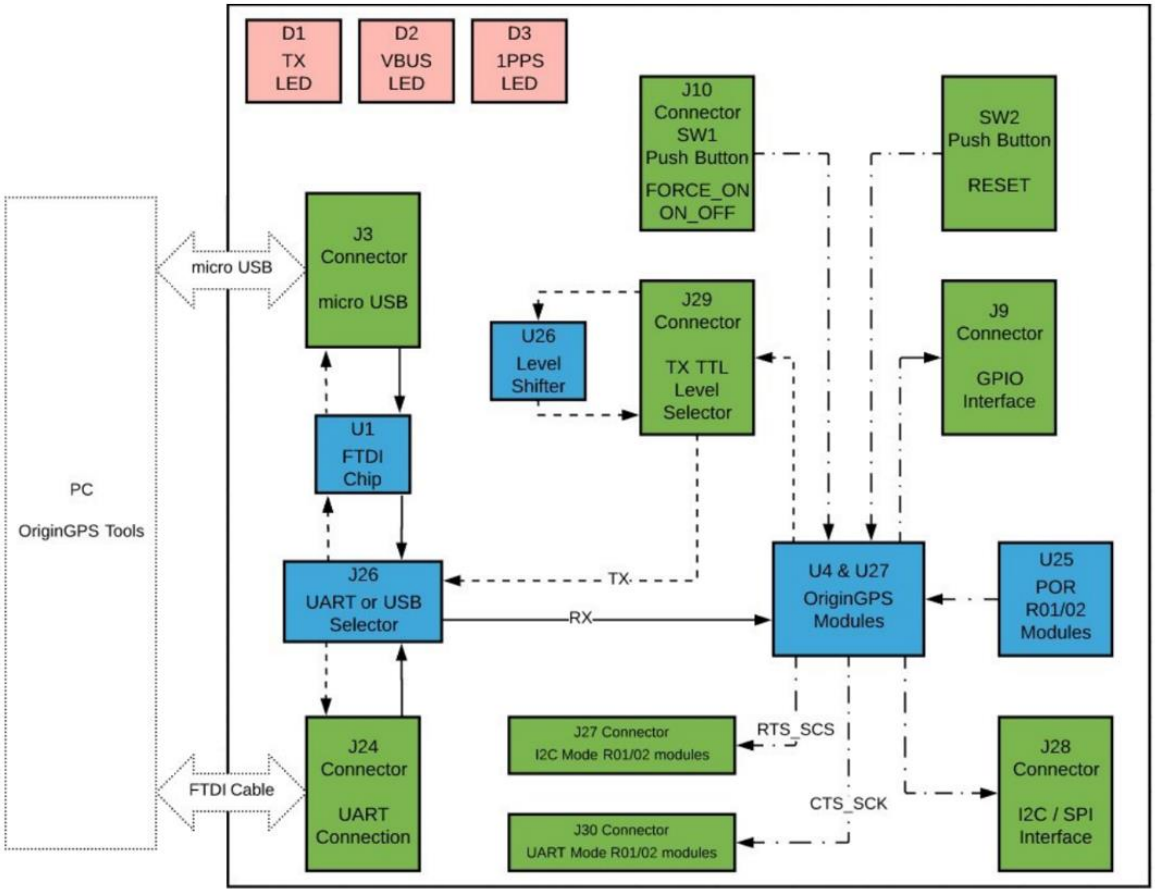

Figure 3. Flow Chart - Interfaces

5.4. Flow Chart - Power Supply Components

The below Figure depicts the functionality of the board, specifically relating to the power source components. The diagram enables viewing the power supply components, the connectors and the toggle options to control the OriginGPS Evaluation Kit.

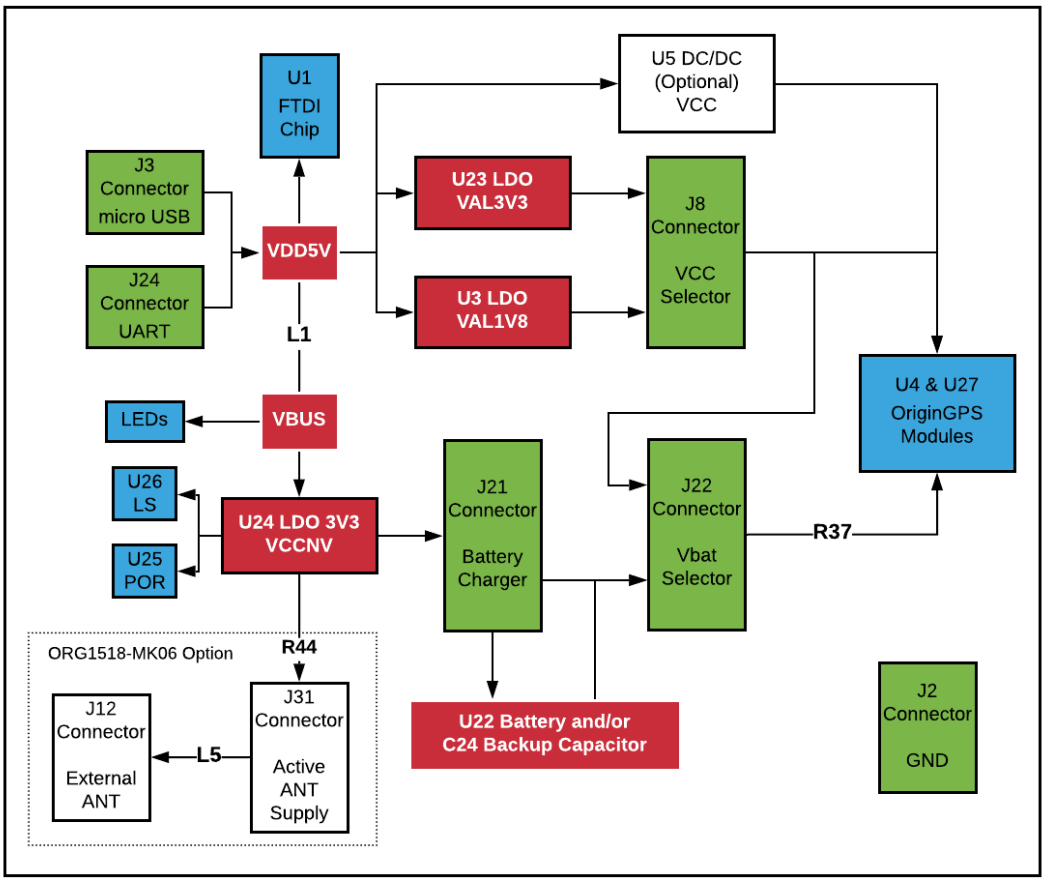

Figure 4. Flow Chart – Power Supply Components

6. SCHEMATICS

The ORG4572-MK05 Evaluation Kit can be used for all OriginGPS modules; Spider, and Hornet. Therefore, while schematics contain all the components, the BOM is necessary to understand the assembled components for the ORG4572-MK05 module.

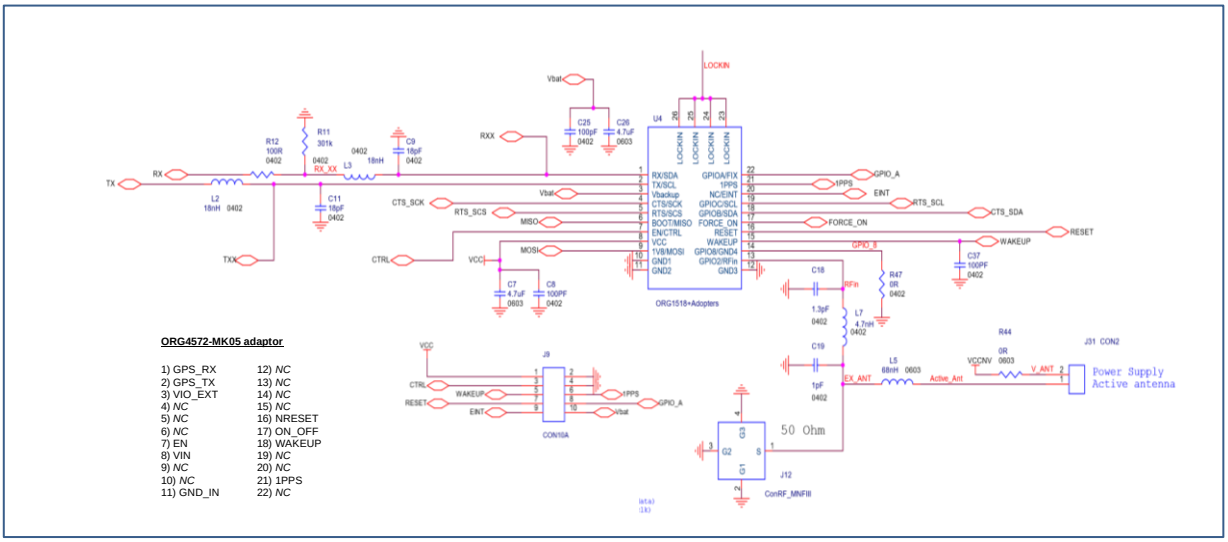

Figure 5. Schematics Page 1

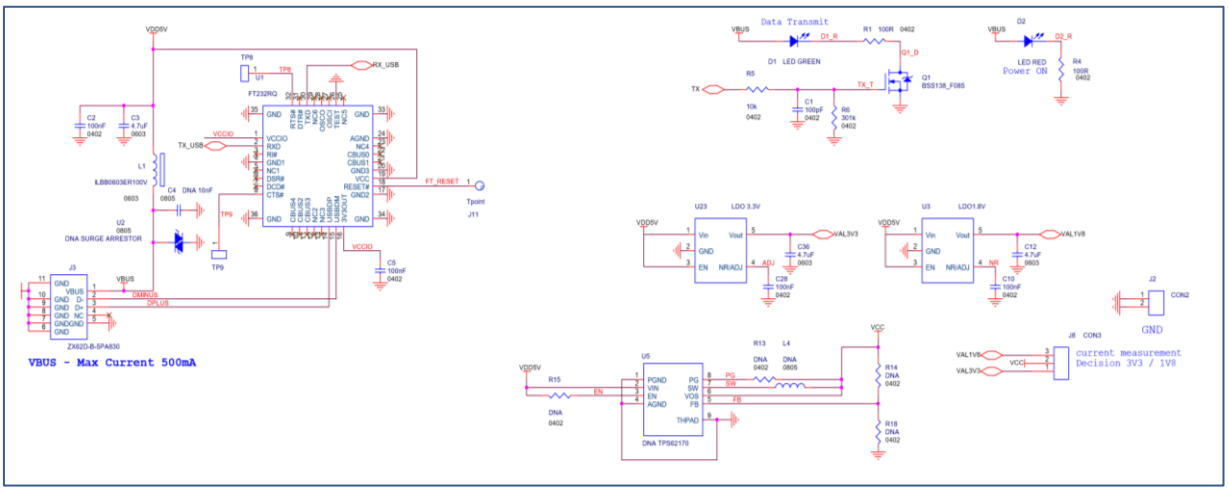

Figure 6. Schematics Page 2

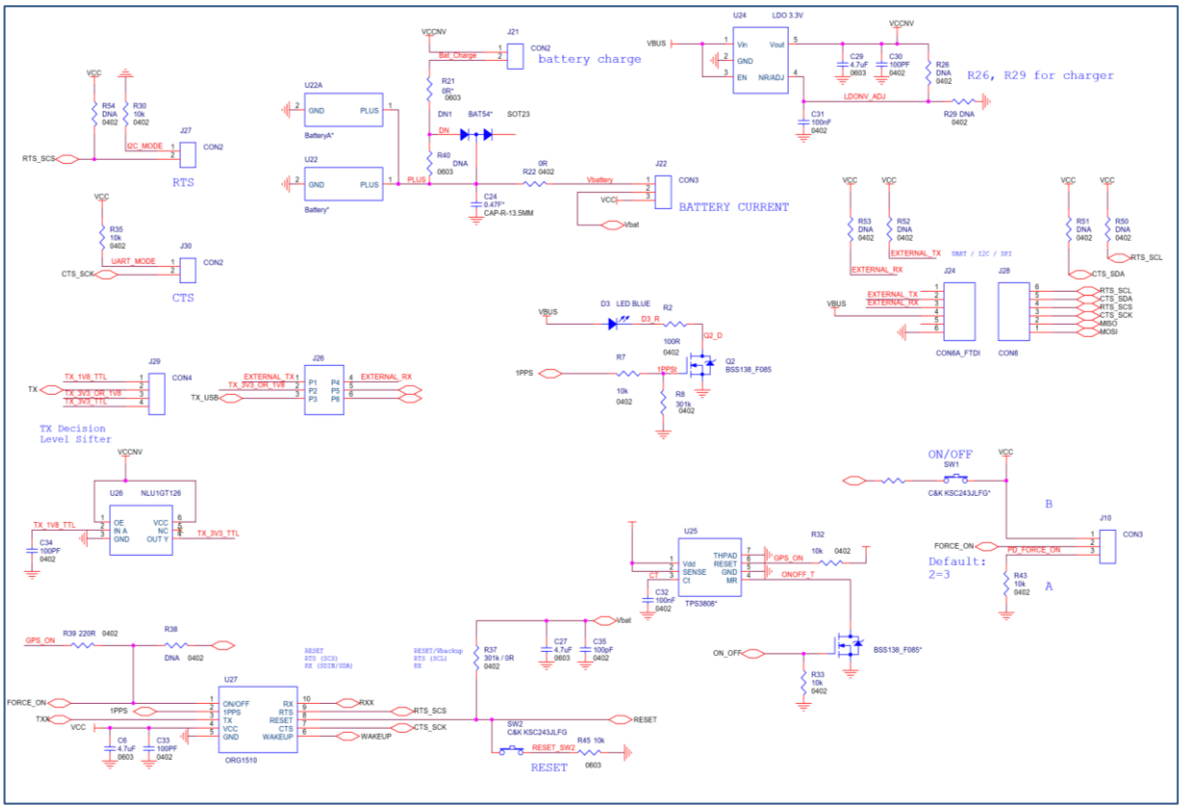

Figure 7. Schematics Page 3

7. BILL OF MATERIALS

Table 1. Bill of Materials

REF	Comp. Designation	QTY	Component Description	Catalog Number	Manufacturer	Packaging	NOTE
CS	R22, R38, R47, C18	4	RES SMT 0402 0Ω ±5%	CRCW04020000Z0ED	VISHAY	0402	MAIN
				RM04JTN0	TA-I		SUBS
				RC0402JR-070RL	YAGEO		SUBS
				CR02JL6-0R	TMTEC		SUBS
CS	R5, R7, R30, R32, R33, R35, R43	7	RES SMT 0402 10K ±1%	CRCW040210K0FKED	VISHAY	0402	MAIN
				RM04FTN1002	TA-I		SUBS
				RC0402FR-0710KL	YAGEO		SUBS
				CR02FL6-10K	TMTEC		SUBS
CS	C9, C11	2	CAP SMT 0402 18pF ±5% 50V COG	GRM1555C1H180JA01D	MURATA	0402	MAIN
				UMK105CH180JV-F	TAIYO YUDEN		SUBS
CS	C2, C5, C10, C28, C31, C32	6	CAP SMT 0402 100nF ±10% 16V X7R	GRM155R71C104KA88D	MURATA	0402	MAIN
				EMK105V7104KV-F	TAIYO YUDEN		SUBS
					TDK		SUBS
CS	U3	1	LDO 1.8V	TLV70018DDCT		SOT25	MAIN
CS	U23, U24	2	LDO 3.3V	TLV70033DDCT		SOT25	MAIN
CS	C1, C8, C25, C30, C34, C37	6	CAP SMT 0402 100pF ±5% 50V COG	GRM1555C1H101JA01D	MURATA	0402	MAIN
				UMK105CH100JW-F	TAIYO YUDEN		SUBS
CS	L2, L3	2	CHIP EMIFIL INDUCTOR 18nH 5%	LQG15HS18NJ02D	MURATA	0402	MAIN
CS	C3, C7, C12, C26, C29, C36	6	CAP SMT 0603 4.7uF ±10% 6.3V X5R	GRM188R60J475KE19D	MURATA	0603	MAIN
				JMK107BJ475KA-T	TAIYO YUDEN		SUBS
					TDK		SUBS
CS	R6, R8, R11, R37	4	RES SMT 0402 301KΩ ±1%	CRCW 0402 -301K	VISHAY	0402	MAIN
				CR02FL6-301K	TMTEC		SUBS
CS	U26	1	Single Buffer 3 STATE	NLU1GT126CMUTCG	ON	ULLGA6_1.0x1.0	MAIN
					TI		SUBS
CS	U25	1	POR PROGR. DELAY IC	TPS3808G18DRVR	TI	DRV	MAIN
CS	R1, R2, R4, R12	4	RES SMT 0402 100Ω ±1%	RM04FTN1000	TA-I	0402	MAIN
				CR02FL6-100R	TMTEC		SUBS
					VISHAY		SUBS
CS	R21	1	RES SMT 0603 0Ω ±5%	CRCW06030000Z0EA	VISHAY	0603	MAIN
				RM06JTN0	TA-I & BITEL		SUBS
CS	SW1, SW2	2	SMD TACT SWITCH	TJ-532-V-T/R	DIPTRONICS	TJ-532	MAIN
				IT1158A-200G	SWITCHTRONIC		SUBS
CS	Q1, Q2, Q21	3	BSS138_F085	BSS138_F085	ON Semiconductor	SOT23	MAIN
CS	J3	1	microUSB	ZX65D-B-5PA830		USB-MICRO-B-TH	MAIN
CS	R3	1	220R 0402	RM04F2200CT	TA-I	0402	MAIN
CS	C4	1	0.01uF (10nF) 50V 0805	GCM219R91H103KA37D		805	MAIN

CS	L1	1	10R 25% FERRITE BEADS 0603	ILBB0603ER100V		603	MAIN
CS	U1	1	FT232R Single Ch FTDI USB Interface IC	FT232RQ-TRAY		QFN32	MAIN
CS	D3	1	LED Blue SMT 0805 20mA	APT2012QBC/D	Kingbright	805	MAIN
CS	D1	1	LED Green Water Clear SMT 0805 20mA	APT2012SGC	Kingbright	805	MAIN
CS	D2	1	LED RED Water Clear SMT 0805 20mA	APT2012SRCPRV	Kingbright	805	MAIN
CS	DN1	1	30V 200mA Fairchild SchoTtky Diodes & Rectifiers 30V	BAT54S		SOT23	MAIN
				BAT54SLT1G			SUBS
CS	R45	1	10K 0603	CRCW060310K0FKEAC		603	MAIN
CS	U2	1	ESD Suppressors / TVS Diodes WE-VE ESD 0805 12V 56pF	82350120560		805	MAIN
CS	U4	1	ORG1518+Adopters	ORG1518+Adopters	OriginGPS	1518rf	MAIN
CS	J2	1	CON2	M22-2510205		SIP2-2MM	MAIN
CS	J21	1	CON2	M22-2510205		SIP2-2MM	MAIN
CS	J27	1	CON2	M22-2510205		SIP2-2MM	MAIN
CS	J30	1	CON2	M22-2510205		SIP2-2MM	MAIN
CS	J8	1	CON3	M22-2510305		SIP3-2MM	MAIN
CS	J10	1	CON3	M22-2510305		SIP3-2MM	MAIN
CS	J22	1	CON3	M22-2510305		SIP3-2MM	MAIN
CS	J29	1	CON4	M22-2510405		SIP4-2MM	MAIN
CS	J28	1	CON6	M22-2510605		SIP6-2MM	MAIN
CS	J9	1	CON9A (Without Pad 2)	M22-2510505		SIP2X5-2MM	MAIN
CS	J24	1	CON6A_FTDI	2211S-06G-F1	NELTRON	HEADER6X1	MAIN
CS	J26	1	12VDC 0.1 AMP E-SWITCH Slide Switches	EG2209	E-SWITCH	SW-EDGE-SLIDE-6	MAIN

8. Assembly and Layout

8.1. ORG4572-MK05 - Main Board

The main board of the ORG4572-MK05 comprises 2 layers with thickness of 1.6mm FR4 PCB.

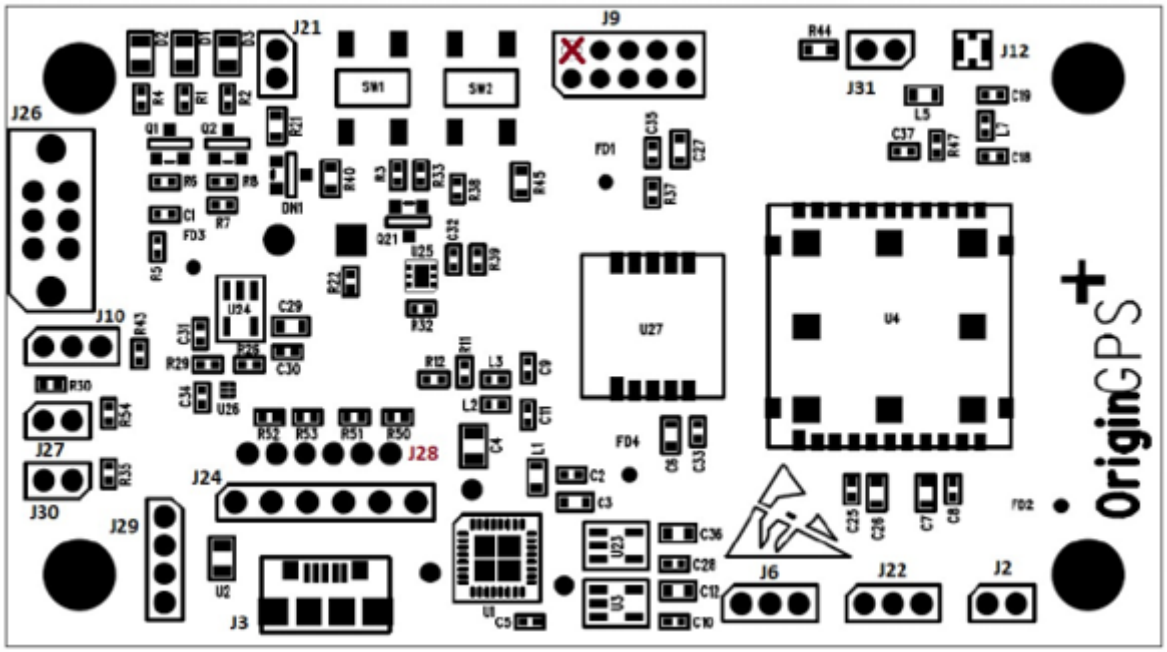

Figure9. Main Board Components Placement (Top Side)

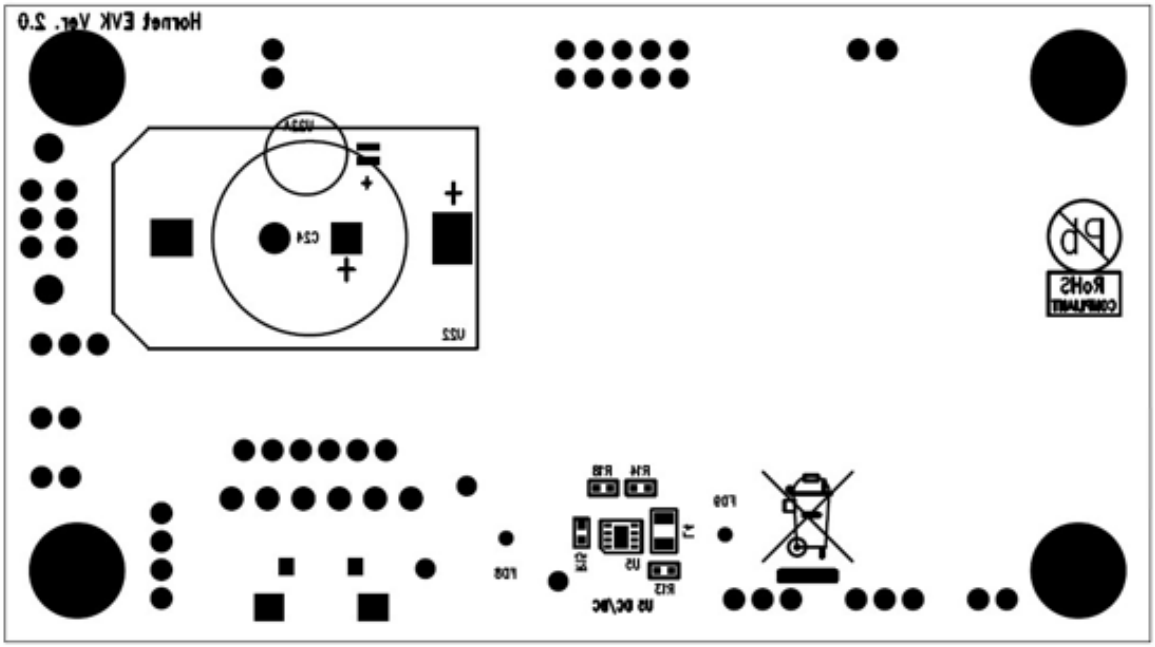

Figure 10. Main Board Components Placement (Bottom Side)

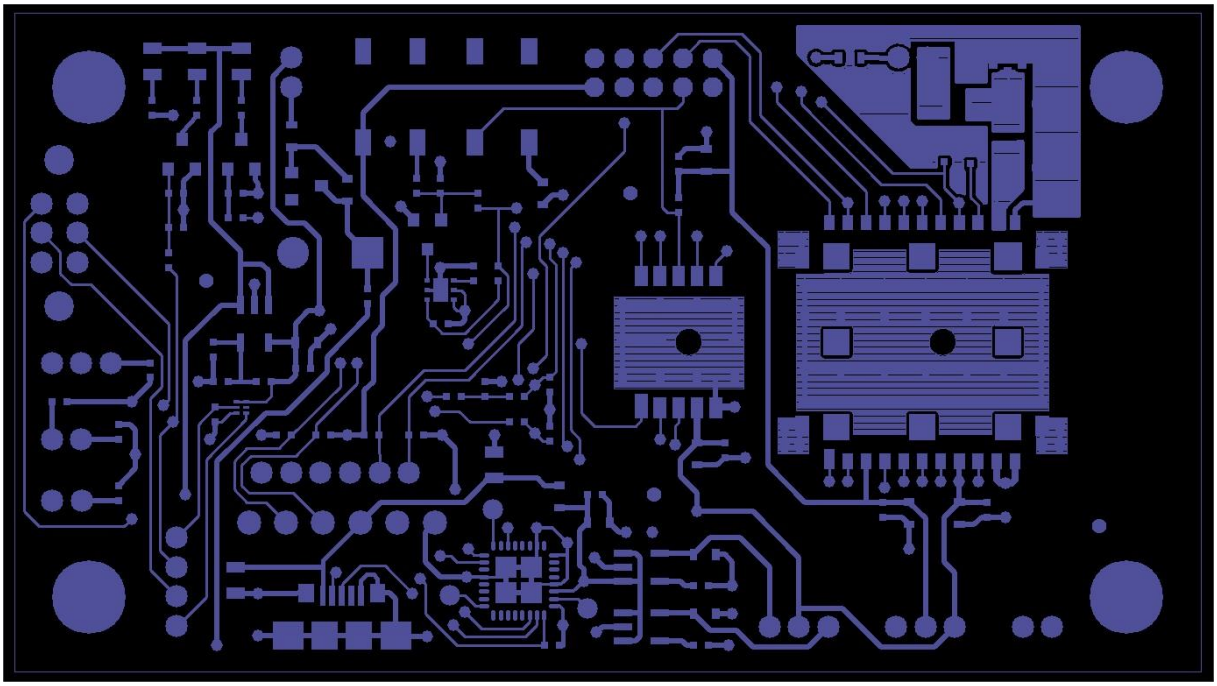

Figure 11. Gerber Top Side CS Layer

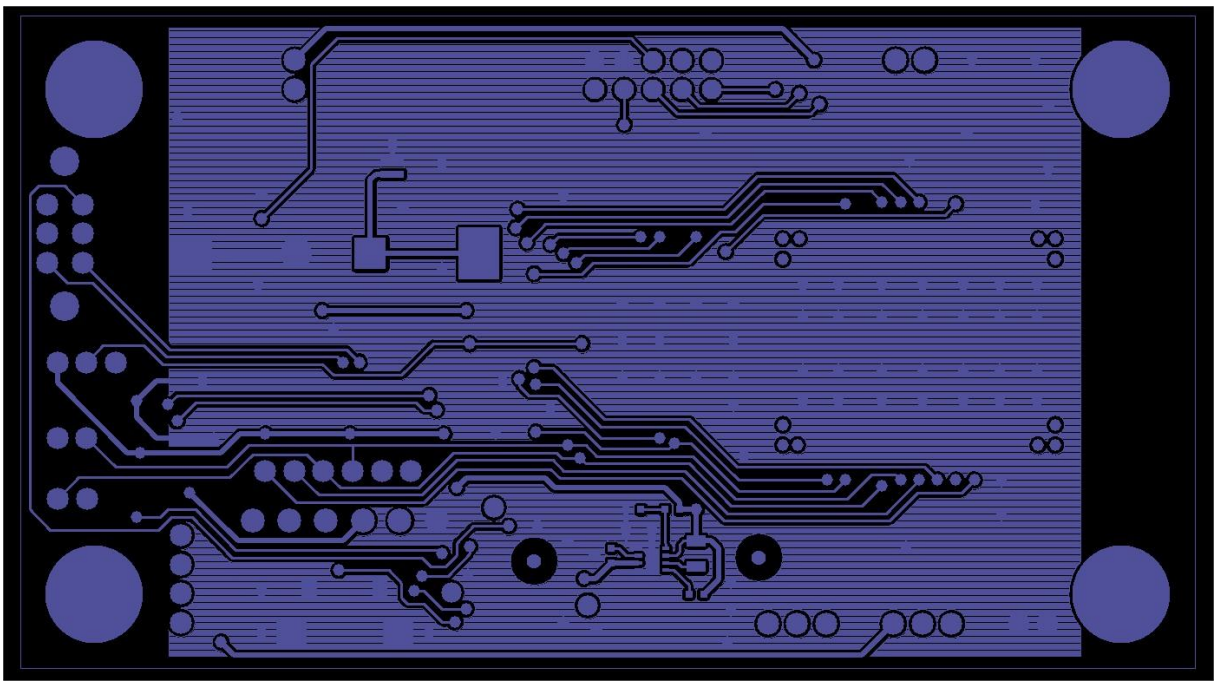

Figure 12. Gerber Bottom Side PS Layer

8.2. Adapter Board

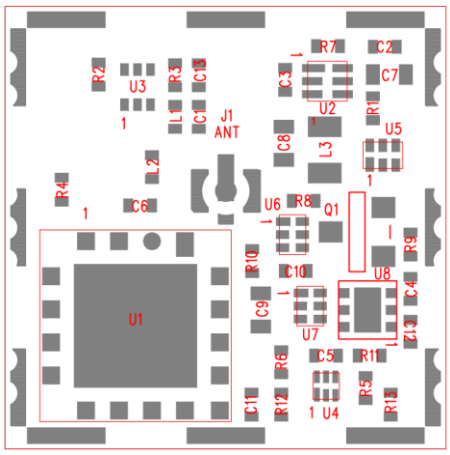

Figure 13. Interface Adapter Board Components Placement

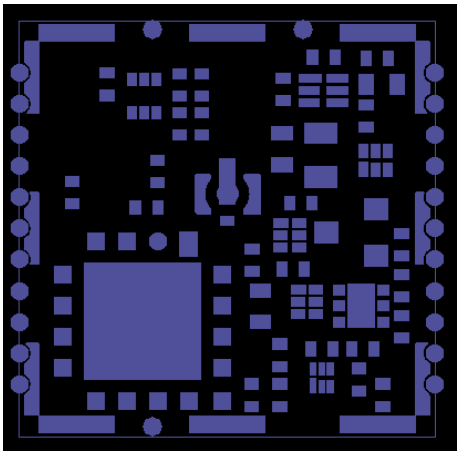

Figure 14. Interface Adapter Board Solder Mask

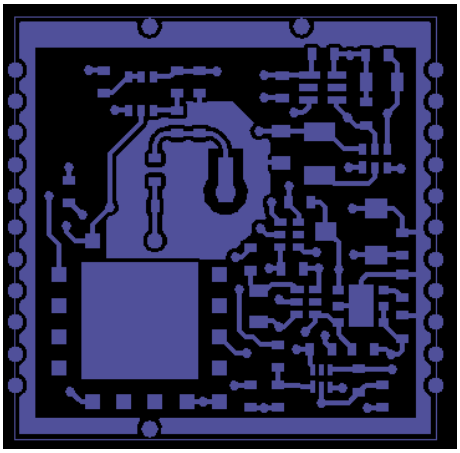

Figure 15. Interface Adapter Board Top Layer Routing

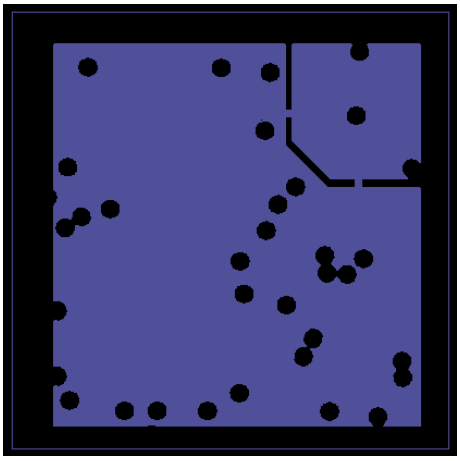

Figure 16. Interface Adapter Layer 2 Routing

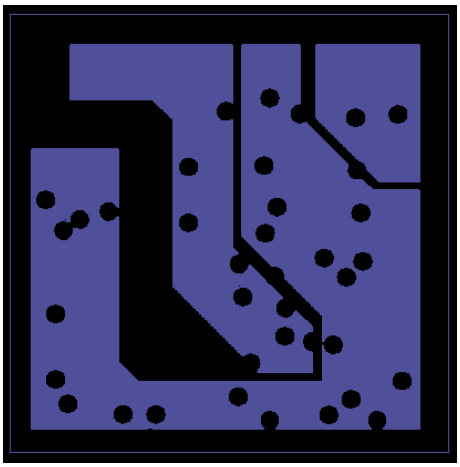

Figure 17. Interface Adapter Layer 3 Routing

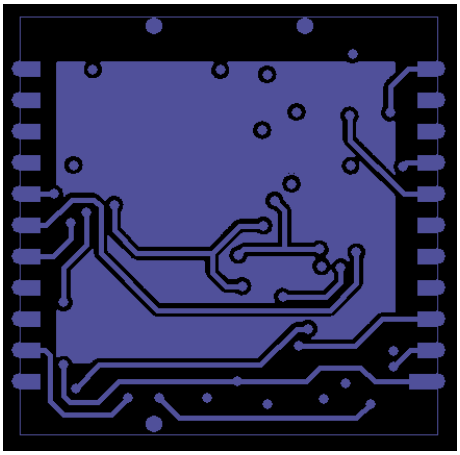

Figure 18. Interface Adapter Bottom Layer Routing

9. ORDERING INFORMATION

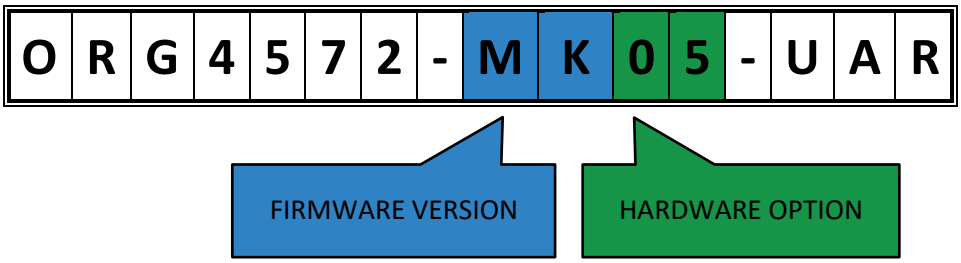

Table 2. Orderable Devices

Part Number	Firmware Version	Hardware Option	VCC Range	Packaging	SPQ
ORG4572-MK05-UAR	MK	05	5V USB	Evaluation Kit	1